DOUBLE OVEN GAS COOKER

models CK 407 G
CK 407 GSL

Installation advice - Instructions for use

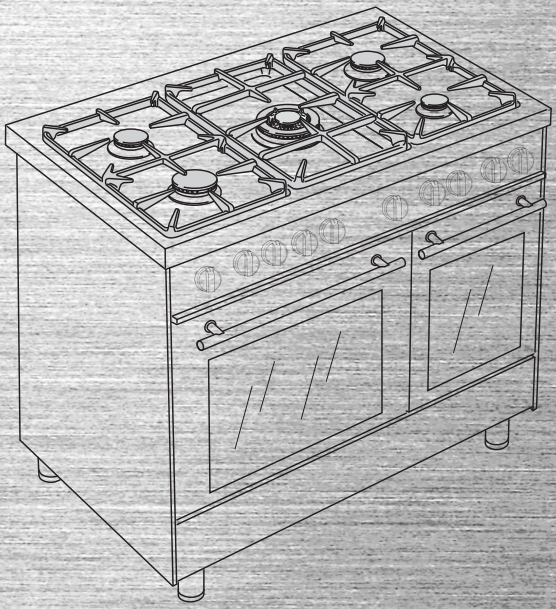

GB
IE

KENWOOD

Before operating this cooker,
please read these instructions carefully

CONTENTS

	Page Number
Introduction	3
Important Safety Precautions & Recommendations	4 - 8
Advice for the installer	9 - 10
Installation	11 - 15
Gas Installation	16 - 25
Electrical Installation	26 - 27
Advice for the users	29
Cooking Hob	30
Control Panel	31
Use of the Hob Burners	32 - 34
Left main gas oven with grill	35 - 38
Right small gas oven	39 - 40
Oven Temperature Guide	41
120 minute timer	42
Cleaning & Maintenance	43 - 49
Guarantee .& After Sales Service	50

Dear Customer,

Thank you for purchasing a Kenwood CK 407 G .. double oven gas cooker.

The safety precautions and recommendations reported below are for your own safety and that of others. They will also provide a means by which to make full use of the features offered by your appliance.

Please preserve this booklet carefully. It may be useful in future, either to yourself or to others in the event that doubts should arise relating to its operation.

This appliance must be used only for the task it has explicitly been designed for, that is for cooking foodstuffs. Any other form of usage is to be considered as inappropriate and therefore dangerous.

The manufacturer declines all responsibility in the event of damage caused by improper, incorrect or illogical use of the appliance.

DECLARATION OF CE CONFORMITY

- This appliance has been designed to be used only for cooking. Any other use (such as heating a room) is improper and dangerous.
- This appliance has been designed, constructed, and marketed in compliance with:
  - Safety requirements of the “Gas” Regulation (EU) 2016/426;
  - Safety requirements of the “Low voltage” Directive 2014/35/EU;
  - Safety requirements of the “EMC” Directive 2014/30/EU;
  - Requirements of EU Directive 93/68/EEC;
  - Requirements of EU Directive 2011/65/EU.

CE GB IE

IMPORTANT INFORMATION FOR CORRECT DISPOSAL OF THE PRODUCT IN ACCORDANCE WITH EC DIRECTIVE 2012/19/EC.

At the end of its working life, the product must not be disposed of as urban waste. It must be taken to a special local authority differentiated waste collection centre or to a dealer providing this service.
Disposing of a household appliance separately avoids possible negative consequences for the environment and health deriving from inappropriate disposal and enables the constituent materials to be recovered to obtain significant savings in energy and resources. As a reminder of the need to dispose of household appliances separately, the product is marked with a crossed-out wheeled dustbin.

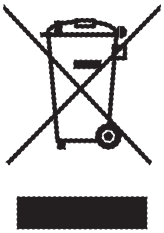

IMPORTANT SAFETY PRECAUTIONS AND RECOMMENDATIONS

IMPORTANT: This appliance is designed and manufactured solely for the cooking of domestic (household) food and is not suitable for any non domestic application and therefore should not be used in a commercial environment.
The appliance guarantee will be void if the appliance is used within a non domestic environment i.e. a semi commercial, commercial or communal environment.

Read the instructions carefully before installing and using the appliance.

- This appliance has been designed and manufactured in compliance with the applicable standards for the household cooking products and it fulfills all the safety requirements shown in this manual, including those for surface temperatures.
  Some people with sensitive skin may have a more pronounced temperature perception with some components although these parts are within the limits allowed by the norms.
  The complete safety of the appliance also depends on the correct use, we therefore recommend to always pay a extreme attention while using the product, especially in the presence of children.
- After having unpacked the appliance, check to ensure that it is not damaged and that the oven door closes correctly.
  In case of doubt, do not use it and consult your supplier or a professionally qualified technician.
- Packing elements (i.e. plastic bags, polystyrene foam, nails, packing straps, etc.) should not be left around within easy reach of children, as these may cause serious injuries.
- Some appliances are supplied with a protective film on steel and aluminium parts. **This film must be removed before using the appliance.**
- IMPORTANT: The use of suitable protective clothing/gloves is recommended when handling or cleaning this appliance.
- Do not attempt to modify the technical characteristics of the appliance as this may become dangerous to use. The manufacturer declines all responsibility for any inconvenience resulting from the inobservance of this condition.

- CAUTION: this appliance must only be installed in a permanently ventilated room in compliance with the applicable regulations.
- Do not operate your appliance by means of an external timer or separate remote-control system.
- Do not carry out cleaning or maintenance operations on the appliance without having previously disconnected it from the electric power supply.
- WARNING: Ensure that the appliance is switched off before replacing the oven lamp to avoid the possibility of electric shock.
- Do not use a steam cleaner because the moisture can get into the appliance therefore making it unsafe.
- Do not touch the appliance with wet or damp hands (or feet).
- Do not use the appliance whilst in bare feet.
- If you should decide not to use this appliance any longer (or decide to substitute another model), before disposing of it, it is recommended that it be made inoperative in an appropriate manner in accordance to health and environmental protection regulations, ensuring in particular that all potentially hazardous parts be made harmless, especially in relation to children who could play with unused appliances.
- The various components of the appliance are recyclable. Dispose of them in accordance with the regulations in force in your country. If the appliance is to be scrapped, remove the power cord.
- After use, ensure that the knobs are in the off position.
- Children less than 8 years of age shall be kept away unless continuously supervised.
- This appliance can be used by children aged from 8 years and above and persons with reduced physical, sensory or mental capabilities or lack of experience and knowledge if they have been given supervision or instruction concerning use of the appliance in a safe way and understand the hazards involved. Children shall not play with the appliance. Cleaning and user maintenance shall not be made by children without supervision.
- The manufacturer declines all liability for injury to persons or damage to property caused by incorrect or improper use of the appliance.

- WARNING: During use the appliance and its accessible parts become hot; they remain hot for some time after use.
  - Care should be taken to avoid touching heating elements (on the hob and inside the oven).
  - The door is hot, use the handle.
  - To avoid burns and scalds, young children should be kept away.
- Make sure that electrical cables connecting other appliances in the proximity of the cooker cannot come into contact with the hob or become entrapped in the oven door.
- WARNING: Unattended cooking on a hob with fat or oil can be dangerous and may result in fire. NEVER try to extinguish a fire with water, but switch off the appliance and then cover flame e.g. with a lid or a fire blanket.
- WARNING: Danger of fire: do not store items on the cooking surfaces.
- WARNING: When correctly installed, your product meets all safety requirements laid down for this type of product category. However special care should be taken around the rear or the underneath of the appliance as these areas are not designed or intended to be touched and may contain sharp or rough edges, that may cause injury.
- FIRST USE OF THE OVEN - it is advised to follow these instructions:
  - Furnish the interior of the oven as described in the chapter “CLEANING AND MAINTENANCE”.
  - Switch on the empty oven on max to eliminate grease from the heating elements.
  - Disconnect the appliance from the electrical power supply, let the oven cool down and clean the interior of the oven with a cloth soaked in water and neutral detergent; then dry carefully.
- CAUTION: Do not use harsh abrasive cleaners or sharp metal scrapers to clean the oven door glass since they can scratch the surface, which may result in shattering of the glass.
- Do not line the oven walls or base with aluminium foil. Do not place baking trays or the drip tray on the base of the oven chamber.

- Do not cover the hob with aluminium foils.
- FIRE RISK! Do not store flammable material in the oven or in the storage compartment.
- Always use oven gloves when removing the shelves and food trays from the oven whilst hot.
- Do not hang towels, dishcloths or other items on the appliance or its handle – as this could be a fire hazard.
- Clean the oven regularly and do not allow fat or oils to build up in the oven base or tray. Remove spillages as soon as they occur.
- Do not stand on the cooker or on the open oven door.
- Always stand back from the appliance when opening the oven door to allow steam and hot air to escape before removing the food.
- SAFE FOOD HANDLING: Leave food in the oven for as short a time as possible before and after cooking. This is to avoid contamination by organisms which may cause food poisoning. Take particular care during warmer weather.
- WARNING: Take care NOT to lift the cooker by the door handle.
- CAUTION: The cooking process has to be supervised. A short term cooking process has to be supervised continuously.
- The appliance must not be installed behind a decorative door in order to avoid overheating.
- The oven accessories (e.g. oven wire rack) must be fitted correctly as indicated at page 47.
- IMPORTANT NOTE: The oven shelves (for some products one shelf only is provided) have not been designed to place the food directly on the shelf itself. When cooking, always place the food in special containers or use specific materials suitable for the food contact.
- If the power supply cable is damaged, it must be replaced only by an authorized service agent in order to avoid a hazard.
- If the appliance is not fitted with a supply cord and a plug, or with other means for disconnection from the supply mains having a contact separation in all poles that provide full disconnection under overvoltage category III conditions, means for disconnection

must be incorporated in the fixed wiring in accordance with the wiring rules.

- WARNING: The appliance and its accessible parts become hot during use.
  Care should be taken to avoid touching heating elements.
  Children less than 8 years of age shall be kept away unless continuously supervised.
- WARNING: Use only hob guards designed by the manufacturer of the cooking appliance or indicated by the manufacturer of the appliance in the instructions for use as suitable or hob guards incorporated in the appliance. The use of inappropriate guards can cause accidents.

ENERGY LABELLING/ECODESIGN

- Commission delegated regulation (EU) No 65/2014 (supplementing Directive 2010/30/EU of the European Parliament and of the Council).
- Commission regulation (EU) No 66/2014 (implementing Directive 2009/125/EC of the European Parliament and of the Council).

Reference to the measurement and calculation methods used to establish compliance with the above requirements:

- Standard EN 15181 (gas ovens).
- Standard EN30-2-1 (hobs: gas fired burners).

USE OF THE APPLIANCE, ENERGY SAVING TIPS

OVEN

- Check the oven door always closes properly and the door gasket is clean and in order. During use, open the oven door only when strictly necessary to avoid heat losses (for some functions it may be necessary to use the oven with the door half-closed, check the oven operating instructions).
- Turn off the oven 5-10 minutes before the end of the theoretical cooking time to recuperate the stored heat.
- We recommend using oven proof dishes and adjusting the oven temperature during cooking if necessary.

HOB

GAS FIRED BURNERS

- It is important that the diameter of the pot be suitable to the size of the burner so as not to compromise the high output of the burners and therefore energy waste. A small pot on a large burner does not give you a boiling point in a shorter amount of time since the capacity of heat absorption of a liquid mass depends on the volume and the surface of the pot.
- Avoid keeping a burner on without something on it (without pot).

Advice for the installer

IMPORTANT

- The appliance is designed and approved for domestic use only and should not be installed in a commercial, semi commercial or communal environment.
  Your product will not be guaranteed if installed in any of the above environments and could affect any third party or public liability insurances you may have.
  The appliance may be installed in a kitchen, kitchen/diner or a bed sitting room, but not in a room or space containing a bath or a shower without first consulting current regulations.
  The appliance must not be installed in a bed-sitting room of less than 20 m^3.
- A marine application is not to be considered as a domestic enviroment.
- Cooker installation must only be carried out by a **SUITABLY QUALIFIED AND REGISTERED TECHNICIAN** and in compliance with local safety standards.
  Failure to observe this rule will invalidate the warranty.
- The appliance must be installed in compliance with regulations in force in your country and in observation of the manufacturer's instructions.
- Always disconnect the appliance from the power supply before carrying out any maintenance operations or repairs.
- Take care NOT to lift the oven by the door handle/s.
- Some appliances are supplied with a protective film on steel and aluminium parts.
  This film must be removed before using the cooker.
- **Important: The use of suitable protective clothing/gloves is recommended when handling or installing this appliance.**

WARNING
When correctly installed, your product meets all safety requirements laid down for this type of product category.
However special care should be taken around the rear or the underneath of the appliance as these areas are not designed to be touched and may contain sharp or rough edges, that may cause injury.

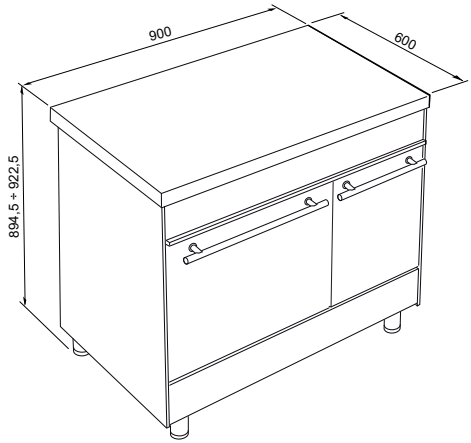

1 - INSTALLATION

This cooker has class “2/1” overheating protection so that it can be installed next to a cabinet.

If the cooker is installed adjacent to furniture which is higher than the gas hob cooktop, a gap of at least 200 mm must be left between the side of the cooker and the furniture.

The walls and kitchen furniture surrounding the appliance must be made of non-flammable material. The veneered synthetical material and the glue used must be resistant to a temperature of 150°C in order to avoid ungluing or deformations. It is recommended that a 10 mm gap to each side is made if the adjacent kitchen furniture is made of a plastic laminate wrap.

Curtains must not be fitted immediately behind appliance or within 500 mm of the sides.

It is essential that the cooker is positioned as stated below.

We do not recommend the cooker is located on a plinth. If this is unavoidable, it will be necessary to provide safety measures to prevent the appliance falling off.

The cooker must be installed by a suitably qualified technician and in compliance with local safety standards.

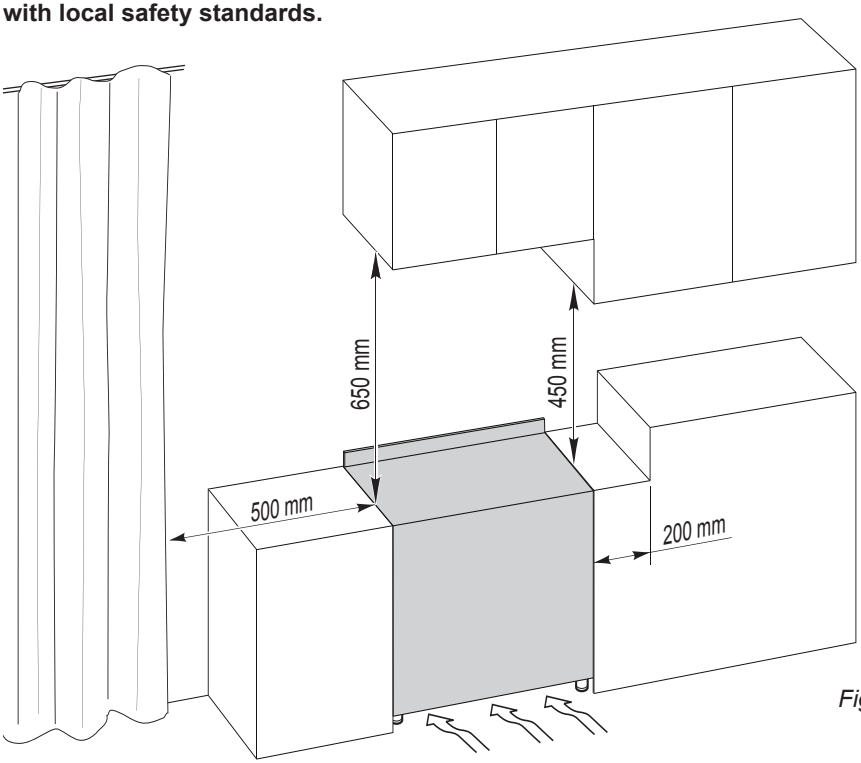

Fig. 1.1

Important: Always maintain conditions that ensure the presence of an adequate air flow at the bottom of the appliance. Do not close off the space between the two levelling feet. If the space must be closed, leave an area of at least 1/4 of the space open.

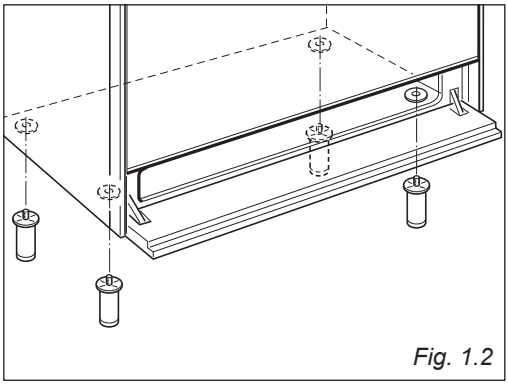

Fig. 1.2

FITTING THE ADJUSTABLE FEET AND LEVELLING THE COOKER

The adjustable feet must be fitted to the base of the cooker before use (figs. 1.2, 1.3).
Rest the rear of the cooker on a piece of the polystyrene packaging exposing the base for the fitting of the feet.
Fit the 4 legs by screwing them tight into the support base as shown in figure 1.3.

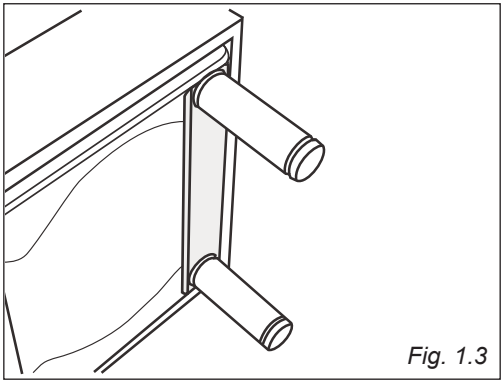

Fig. 1.3

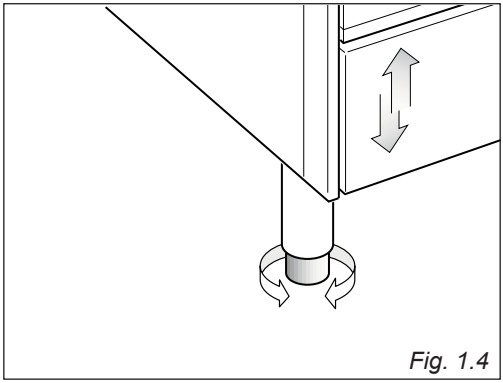

Fig. 1.4

LEVELLING THE COOKER

The cooker may be levelled by screwing the lower ends of the feet IN or OUT (fig. 1.4).

MOVING THE COOKER

WARNING: When raising cooker to upright position always ensure two people carry out this manoeuvre to prevent damage to the adjustable feet (fig. 1.5).

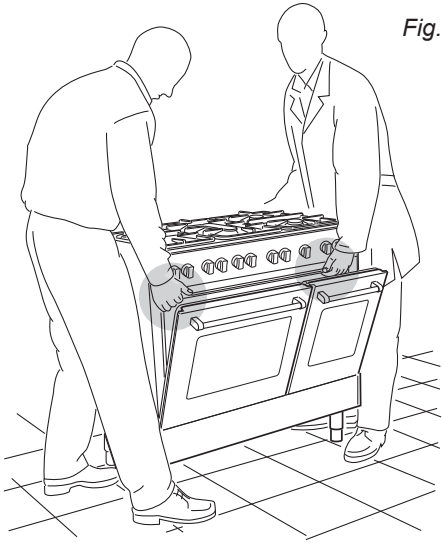

Fig. 1.5

WARNING

Be carefull: Do not lift the cooker by the door handle/s when raising to the upright position (fig. 1.6).

WARNING

When moving cooker to its final position DO NOT DRAG (fig. 1.7).
Lift feet clear of floor (fig. 1.5).

Fig. 1.6

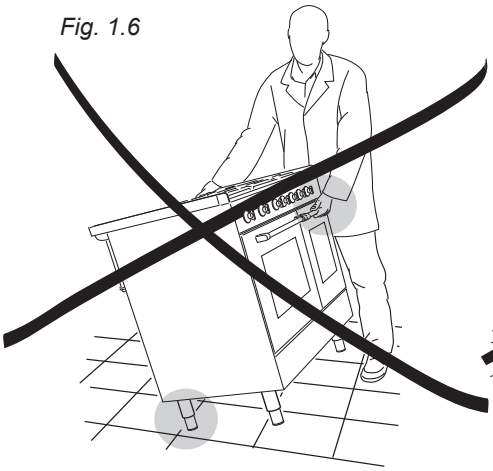

Fig. 1.7

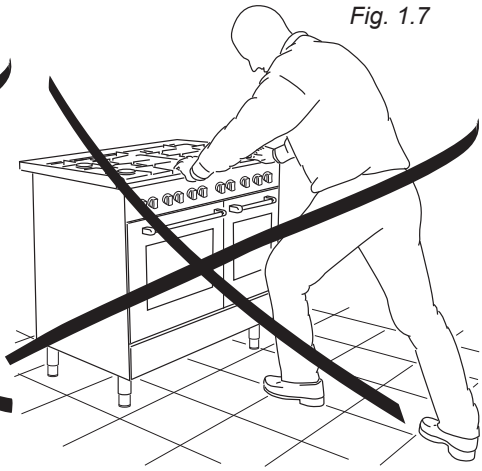

STABILITY BRACKET

We recommend a stability bracket is fitted to the cooker.
The type shown in fig. 1.8 can be purchased from most plumbers merchants and do it yourself (D.I.Y.) shops.

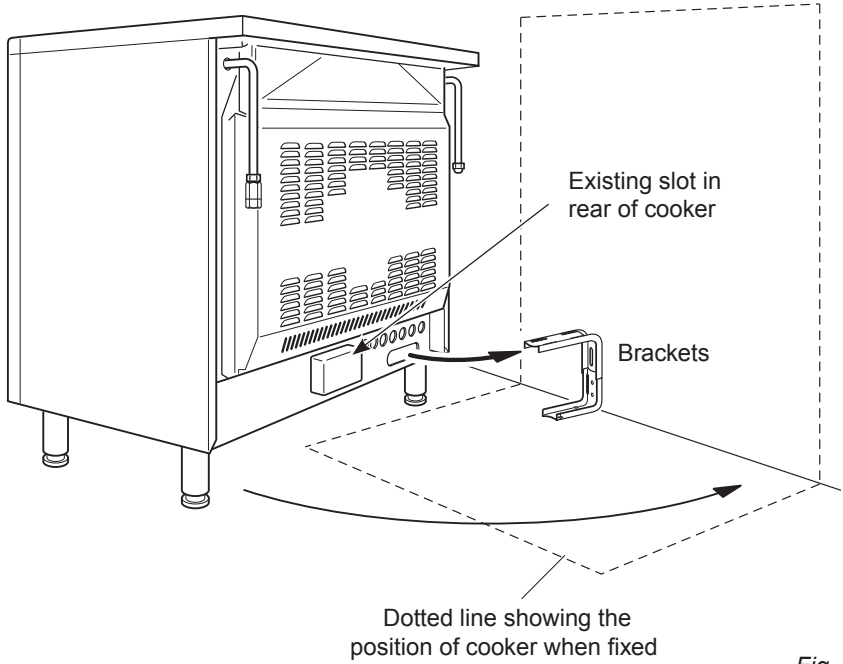

Fig. 1.8

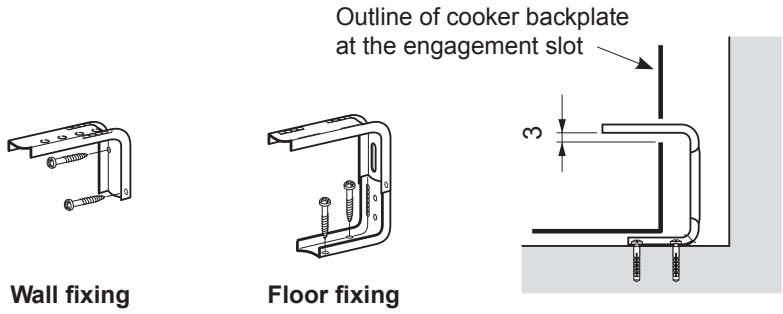

Fig. 1.9

PROVISION FOR VENTILATION

- The appliance should be installed into a room or space with an air supply in accordance with the current version of BS 5440-2: 2000.
- For rooms with a volume of less than 5m^3 - permanent ventilation of 100 cm^2 free area must be provided.
- For rooms with a volume of between 5 m^3 and 10 m^3 a permanent ventilation of 50 cm^2 free area will be required unless the room has a door which opens directly to the outside air in which case no permanent ventilation is required.
- For rooms with a volume greater than 10 m^3 - no permanent ventilation is required.

Note: Regardless of room size, all rooms containing the appliance must have direct access to the outside air via an openable window or equivalent.

- Where there are other fuel burning appliances in the same room, the current version of BS 5440-2: 2000 should be consulted to determine the correct amount of free area ventilation requirements.
- The above requirements allow also for use of a gas oven and grill but if there are other gas burning appliances in the same room, consult a qualified engineer.

2 - GAS INSTALLATION

IMPORTANT NOTE

This appliance is supplied for use on NATURAL GAS or LPG (check the gas regulation label attached on the appliance).

- Appliances supplied for use on NATURAL GAS are adjusted for this gas only and cannot be used on any other gas (LPG) without modification. The appliances are manufactured for conversion to LPG.
- Appliances supplied for use on LPG are adjusted for this gas only and cannot be used on any other gas (NATURAL GAS) without modification. The appliances are manufactured for conversion to NATURAL GAS.

If the NATURAL GAS/LPG conversion kit is not supplied with the appliance this kit can be purchased by contacting the After-Sales Service.

INSTALLATION & SERVICE REGULATIONS (UNITED KINGDOM)

It is a legal requirement that all gas appliances are Installed & Serviced by a competent person in accordance with the current editions of the following Standards & Regulations or those regulations appropriate to the geographical region in which they are to be installed:

- Gas Safety (Installation & Use) Regulations
- Building Regulations
- British/European Standards
- Regulations for Electrical Installation

Installation and service of any gas product must be made by a suitably qualified and registered person competent on the type of product being installed or serviced and holding a valid certificate of competence for the work being carried out. Currently the proof of competence is the Accredited Certification Scheme (ACS) or N/SVQ that has been aligned to the ACS.

It is also a requirement that all businesses or self employed installers are members of a class of person approved by the Health and Safety Executive.

Failure to install the appliance correctly could invalidate any manufacturers warranty and lead to prosecution under the above quoted regulations.

GAS CONNECTION

GB
IE

Cat: II 2H 3+

It is a requirement that a restraining chain (not supplied with the appliance) is also used to prevent stress being applied to the gas hose or pipework. The chain should be attached securely to the product and on the wall (fig. 2.1).

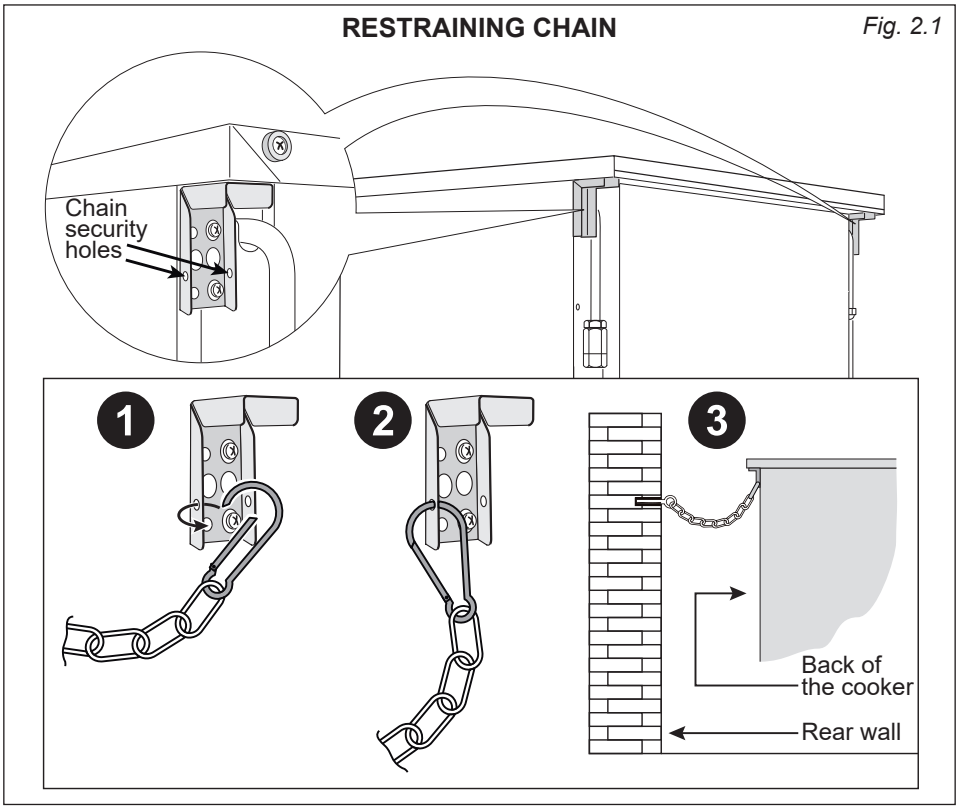

Installation to Natural Gas

Installation to Natural Gas must conform to the Code of Practice, etc.
The supply pressure for Natural Gas is 20 mbar.
The installation must conform to the relevant British/European Standards.

Installation to LP Gas

When operating on Butane gas a supply pressure of 28-30 mbar is required.
When using Propane gas a supply pressure of 37 mbar is required.
The installation must conform to the relevant British/European Standards.

Warning: Only a suitably qualified and registered installer, also with technical knowledge of electricity should install the appliance.
He should observe the Regulations and Codes of Practice governing such installation of gas appliances.
Note: It is recommended that the gas connection to the appliance is installed with a flexible hose connecting tube made to BS669 or EN 14800.

Notes:

- **Flexible hoses can be used where the sited ambient temperature of the hose does not exceed 70°C. These hoses must be manufactured in accordance with BS669 part 1 or EN 14800 and be of the correct construction for the type of gas being used.**
- **Gas hoses designed for natural gas MUST NOT be used for supplying LPG gas (LPG gas hoses can be identified by a either a red band or stripe on the rubber outer coating of the hose).**
  The hose should not be crushed or trapped or be in contact with sharp or abrasive edges.

IMPORTANT! It is the responsibility of the gas installer to ensure that the product is fully tested and commisioned in accordance with current regulations to ensure there are no gas escapes.

Gas connection (figs. 2.2, 2.3, 2.4)

- The gas supply must use the nearest gas inlet pipe which is located at the left or the right hand side at the rear of the appliance.
- **IMPORTANT NOTE:** Before connecting the appliance to the gas mains fit the female connector (supplied with the appliance in a separate kit) to the right or the left inlet pipe using the fibre washer supplied.
- **IMPORTANT: Check the correct positioning of the connector as per pictures and always operate using two suitable spanners.**
- The unused end inlet pipe must be closed with the plug and the fibre washer.
- The hose should not be crushed or trapped or be in contact with sharp or abrasive edges. It should also not be subjected to corrosion by acidic cleansing agents.
  The hose should also be connected in such away that it does not touch the floor and must hang in a natural loop between the appliance and the bayonet fitting.
- To avoid damage to the appliance gas rail inlet pipe the fittings should be tightened using two suitable spanners.

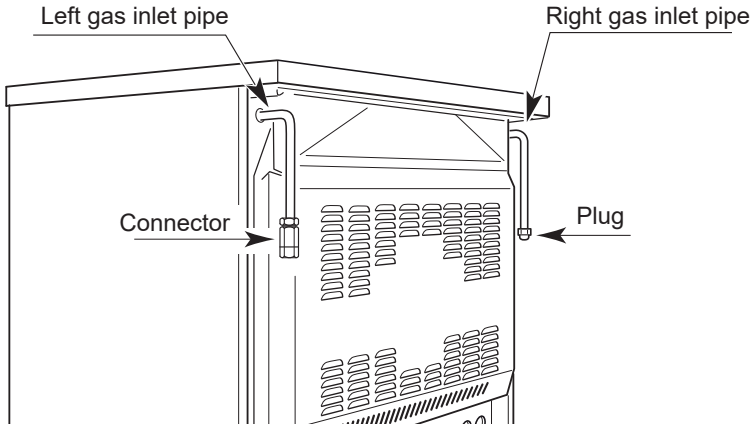

Fig. 2.2

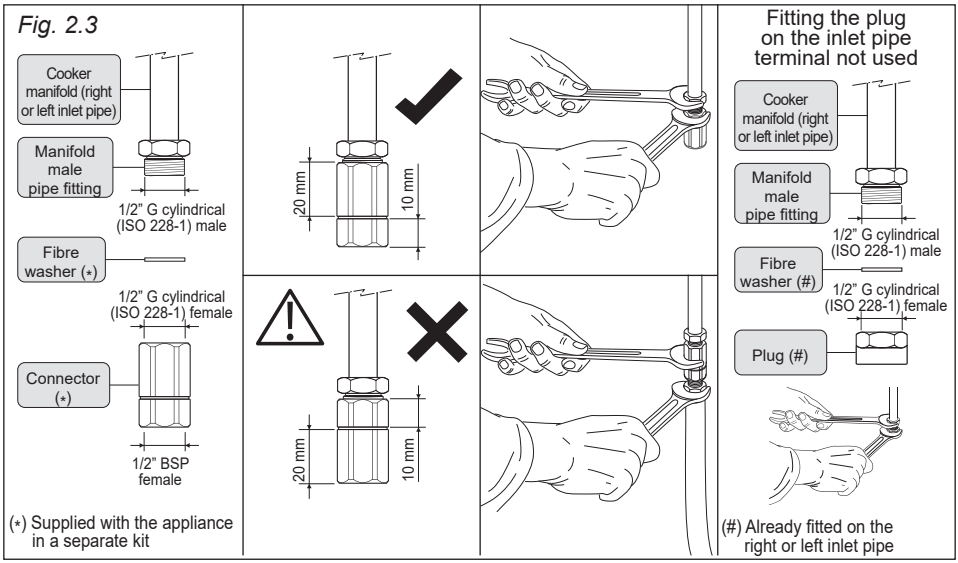

IMPORTANT PRESCRIPTIONS FOR GAS CONNECTION

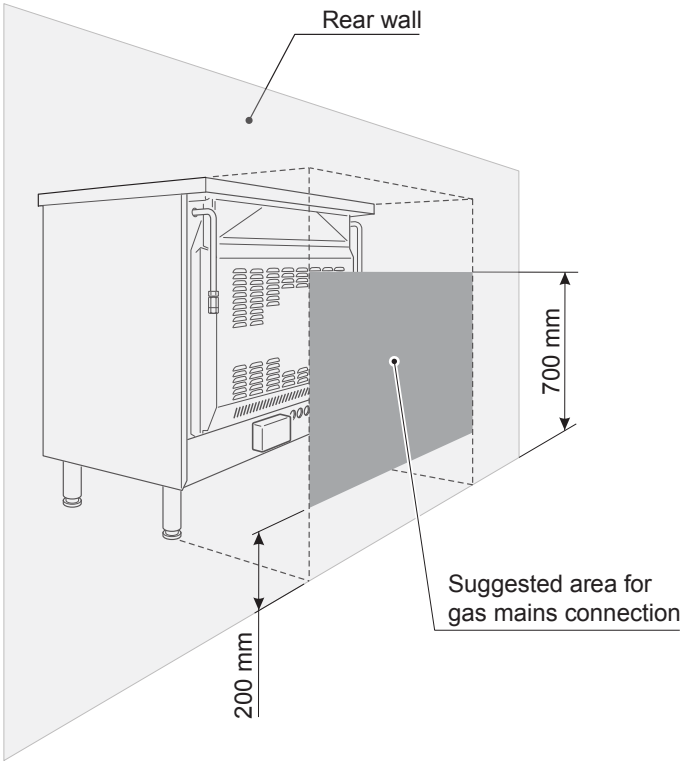

Fig. 2.4

REPLACEMENT OF THE INJECTORS

If the injectors are not supplied they can be obtained from the After-Sales Service.

Select the injectors to be replaced according to the “Table for the choice of the injectors”.
The nozzle diameters, expressed in hundredths of a millimetre, are marked on the body of each injector.

REPLACEMENT OF THE INJECTORS OF THE COOKTOP BURNERS

To replace the injectors proceed as follows:

- Remove pan supports and burners from the cooktop.
- Using a wrench, substitute the nozzle injectors “**J**” (figs. 2.5, 2.6) with those most suitable for the kind of gas for which it is to be used.

The burners are conceived in such a way so as not to require the regulation of the primary air.

ADJUSTING OF THE MINIMUM OF THE TOP BURNERS

In the minimum position the flame must have a length of about 4 mm and must remain lit even with a quick turn from the maximum position to that of minimum.

The flame adjustment is done in the following way:

- Turn on the burner.
- Turn the tap to the MINIMUM position.
- Take off the knob.
- With a thin screwdriver turn the screw “**A**” until adjustment is correct (fig. 2.7).

Normally for LPG, tighten up the regulation screw.

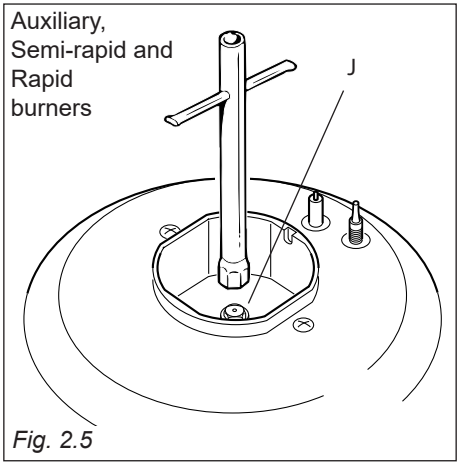

Fig. 2.5

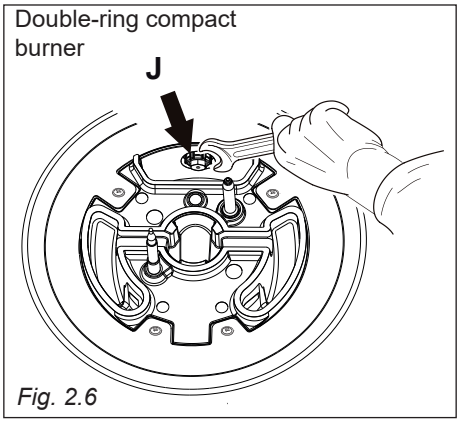

Fig. 2.6

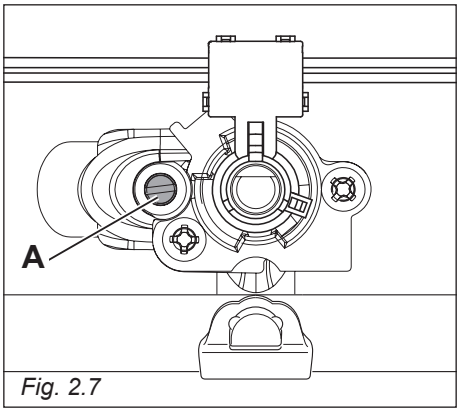

Fig. 2.7

TABLE FOR THE CHOICE OF THE INJECTORS

GB IE **Cat: II 2H3+**

BURNERS	Nominal power [kW]	Reduced power [kW]	**LPG** G30 28-30 mbar G31 37 mbar		**Natural Gas** G20 20 mbar	
			Ø injector [1/100 mm]	Air ring opening [mm]	Ø injector [1/100 mm]	Air ring opening [mm]
Auxiliary (A)	1,00	0,40	50	-	72 (X)	-
Semi-rapid (SR)	1,75	0,45	65	-	97 (Z)	-
Rapid (R)	3,00	0,75	85	-	128 (H3)	-
Double-ring compact (DCC)	4,00	1,50	100	-	150 (H3)	-
Left Oven	3,00	0,75	85	Fully open (*)	125	5 (*)
Left Grill	2,50	-	80	Fully open (*)	120	4 (*)
Right Oven	2,20	0,63	72	Fully open (*)	110	4 (*)

(*) = Reference value

AIR VENT NECESSARY FOR GAS COMBUSTION = (2 m^3/h x kW)	
BURNERS	Air necessary for combustion [m^3/h]
Auxiliary (A)	2,00
Semi-rapid (SR)	3,50
Rapid (R)	6,00
Double-ring compact (DCC)	8,00
Left Oven	6,00
Left Grill	5,00
Right Oven	4,40

LUBRICATION OF THE GAS TAPS

- In case of difficulty in the gas taps operation, call Service.

IMPORTANT

All intervention regarding installation maintenance of the appliance must be fulfilled with original factory parts.
The manufacturer declines any liability resulting from the non-compliance of this obligation.

OPERATIONS TO BE EXECUTED FOR THE REPLACEMENT OF THE INJECTORS OF THE OVEN AND GRILL BURNERS

Some models are provided with a set of injectors for the various types of gas.
If the injectors are not supplied they can be obtained from the "Service Centre".
Select the injectors to be replaced according to the "Table for the choice of the injectors" (for the gas category check the data label attached on the appliance).
The nozzle diameters, expressed in hundredths of a millimetre, are marked on the body of each injector.

OVEN BURNER (Left and right ovens)

- Lift and remove the lower panel inside the oven.
- Unscrew and remove the burner securing screw "**A**" (fig. 2.8).
- Withdraw the burner as shown in figure 10.8 and rest it inside the oven. Take care not to damage the safety valve probe and the electric ignition electrode.
- Using a 7 mm box spanner, unscrew the injector (indicated by the arrow in fig. 2.9) and replace it with a new one selected in accordance with the "Table for the choice of the injectors".
- Regulate the air supply to the oven burner as indicated in the section "REGULATION OF AIR SUPPLY TO OVEN AND GRILL BURNERS"; then replace the burner repeating the above steps in reverse order.
  IMPORTANT: Check the correct operation of the safety valve and the electric ignition.

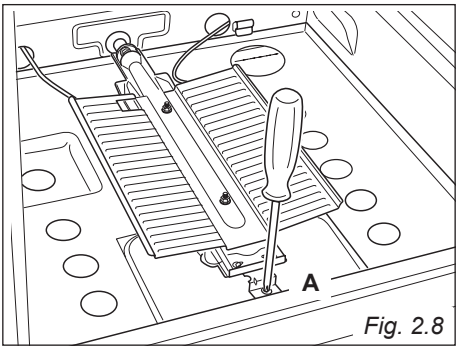

Fig. 2.8

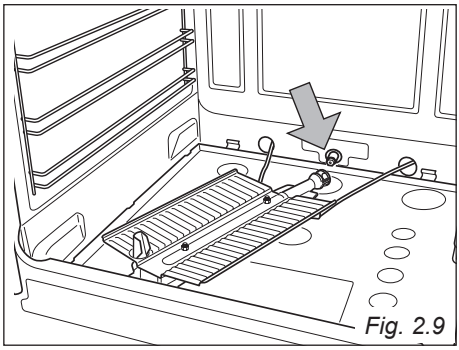
Fig. 2.9

GRILL BURNER (Left oven only)

- Unscrew and remove the burner securing screw “**A**” (fig. 2.10).
- Withdraw the burner as shown in figure 2.10. Take care not to damage the safety valve probe and the electric ignition electrode.
- Using a 7 mm box spanner, unscrew the injector (indicated by the arrow in fig. 2.11) and replace it with a new one selected in accordance with the “Table for the choice of the injectors”.
- Regulate the air supply to the grill burner as indicated in the section “REGULATION OF AIR SUPPLY TO OVEN AND GRILL BURNERS”; then replace the burner repeating the above steps in reverse order.
  IMPORTANT: Check the correct operation of the safety valve and the electric ignition.

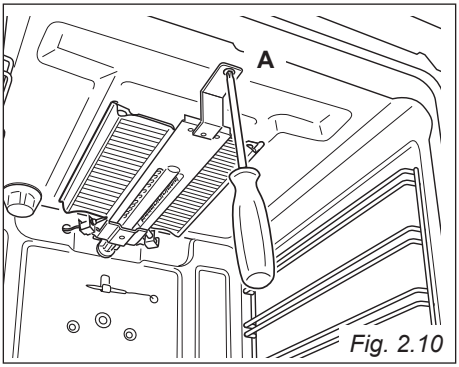

Fig. 2.10

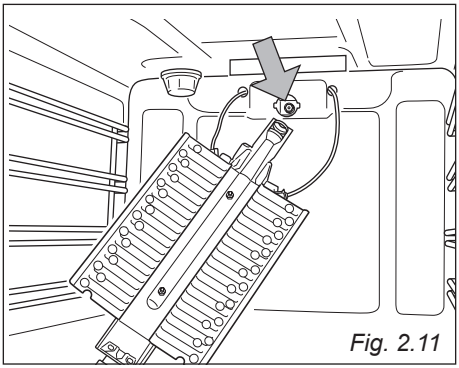
Fig. 2.11

REGULATION OF AIR SUPPLY TO OVEN AND GRILL BURNER (Grill burner on left main oven only)

To regulate the air supply it is necessary to remove the burners from their housings (figs. 2.9 - 2.11).

- Using a cross-head screwdriver, slacken the screws “**A**” securing the air flow regulation collar “**B**” (fig. 2.12) and move the collar forward or backward to increase or reduce the air aperture in accordance with gas type and the indications in the “Table for the choice of the injectors”.

  IMPORTANT: If the air flow regulation collar “**B**” is not already fitted on the burner (e.g. oven burner set in the factory for LPG use), it is supplied with the kit for the gas conversion. In this case the air flow regulation collar “**B**” shall be fitted as indicated in figure 2.12:
  - the collar “**B**” shall be folded around the burner (one half part at the top and one half part at the bottom);
  - the throttled section shall be oriented toward the burner deflector (opposite side with respect to the injector).
- Replace and light the burners to check the flames.

Fig. 2.12

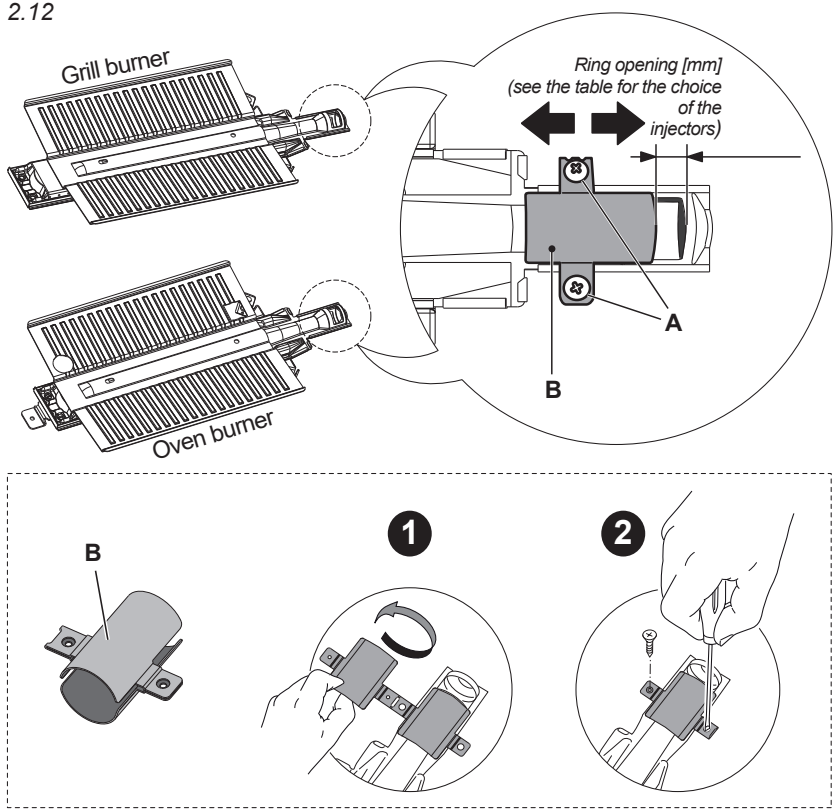

LEFT and RIGHT OVENS: REGULATING OF THE OVEN BURNER MINIMUM

In the minimum position the flame must have a length of about 4 mm and must remain lit even with a brusque passage from the maximum position to that of minimum.

Left oven: to be effected only for the oven burner (as the grill burner has an only fixed input).

The flame adjustment is done in the following way:

- Light the oven taking the knob to maximum position (230 ★).
- Remove the knob and by a thin screwdriver (3 mm section - 100 mm long) unscrew of about a half turn the screw by-pass "**G**", passing through the front panel hole (fig. 2.13)
- Fit the knob and let the oven heat for 10 minutes, then take the knob to minimum position (**130)** allowing the thermostat to work under by-pass.
- After further removal of the knob, stop slowly the screw by-pass "**G**" (being careful not to turn the knob rod) until the flame reaches 3-4 mm high.

Normally for LPG, tighten up the regulation screw.

Fig. 2.13

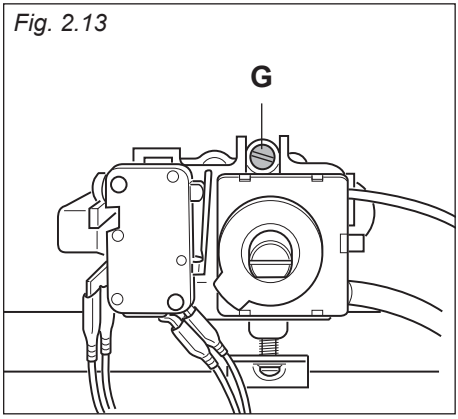

Flame correct

Flame faulty in primary air

Flame with excess primary air

Flame faulty in primary air	Flame correct	Flame with excess primary air
long, yellow and trembling	clear interior blue cone	short and sharp too blue interior cone tending to detach
	CAUSE	
air regulating tube, too closed	correct distance of the tube	air regulating tube, too open

3 - ELECTRICAL INSTALLATION

IMPORTANT: The appliance must be installed in accordance with the manufacturer's instructions. Incorrect installation, for which the manufacturer accepts no responsibility, may cause damage to persons, animals or property.

The connection of the appliance to earth is mandatory. The manufacturer declines all responsibility for any inconvenience resulting from the inobservance of this condition.

Before carrying out any work on the electrical parts of the appliance, the appliance must be disconnected from the mains.

FOR YOUR SAFETY PLEASE READ THE FOLLOWING INFORMATION:

This appliance must be installed by a qualified technician according to the current local regulations and in compliance with the manufacturer instructions.

This appliance is supplied with a moulded 13 amp three pin mains plug with a 3 amp fuse fitted. Should the fuse require replacement, it must be replaced with a fuse rated at 3 amp and approved by ASTA or BSI to BS 1362.

The plug contains a removable fuse cover that must be refitted when the fuse is replaced. In the event of the fuse cover being lost or damaged, the plug must not be used until a replacement cover has been obtained. Replacement fuse covers can be purchased from your nearest electrical dealer and must be the sarne colour as the original.

IF THE MOULDED MAINS PLUG IS UNSUITABLE FOR THE SOCKET OUTLET IN YOUR HOME OR IS REMOVED FOR ANY OTHER REASON, THEN THE FUSE SHOULD BE REMOVED AND THE CUT OFF PLUG DISPOSED OF SAFELY TO PREVENT THE HAZARD OF ELECTRIC SHOCK.
THERE IS A DANGER OF ELECTRICAL SHOCK IF THE CUT OFF PLUG IS INSERTED INTO ANY 13 AMP SOCKET OUTLET.

If a replacement plug is to be fitted, please observe the wiring code shown below.

Warning! This appliance must be earthed.

A properly earthed three pin plug (fused at 3 amps, to BS 1362 ASTA approved) must be used. As the colours of the wires in the mains lead of this appliance may not correspond with the coloured markings identifying the terminals in your plug, proceed as follows:

- The wire which is coloured GREEN & YELLOW must be connected to the terminal in the plug which is marked with letter "**E**" or by the Earth symbol " ⏚ " or coloured GREEN & YELLOW.
- The wire which is coloured BLUE must be connected to the terminal which is marked with the letter "**N**" or coloured BLACK.
- The wire which is coloured BROWN must be connected to the terminal which is marked with the letter "**L**" or coloured RED.

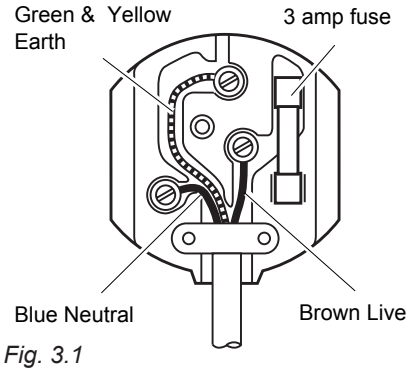

Fig. 3.1

ELECTRICAL FEEDER CABLE REPLACEMENT

WARNING: If the power supply cable is damaged, it must be replaced only by an authorised service agent in order to avoid a hazard.

To connect the supply cable:

- Remove the screw securing the cover “**A**” on the rear of the cooker (fig. 3.2).
- Unscrew cable clamp “**D**” (fig. 3.3).
- Connect the wires to the terminal block “**B**” as shown in the diagram in figure 3.4.
- Take up any slack in the cable and secure with the cable clamp “**D**”.
- Replace the cover “**A**”.

NOTE: The earth conductor must be left about 3 cm longer than the others.

POWER SUPPLY

220-240 V ac 30 W

FEEDER CABLE SPECIFICATIONS
Type “H05V2V2-F” resistant to temperatures of 90°C

3 x 0,75 mm^2

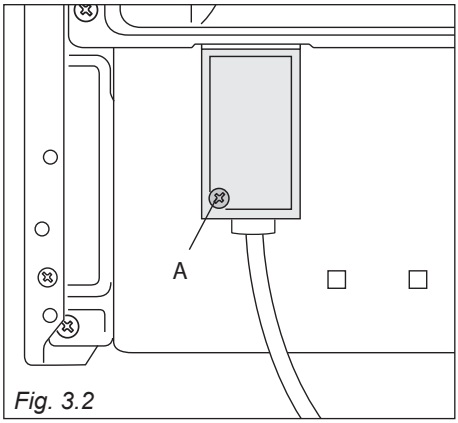

Fig. 3.2

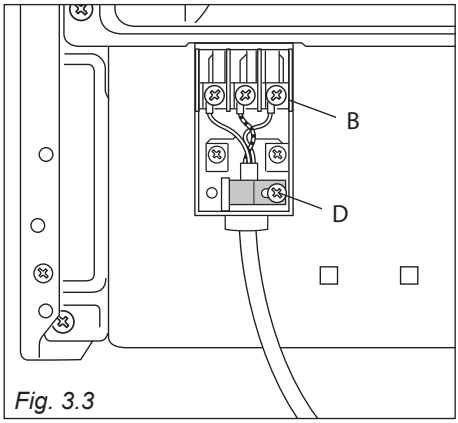

Fig. 3.3

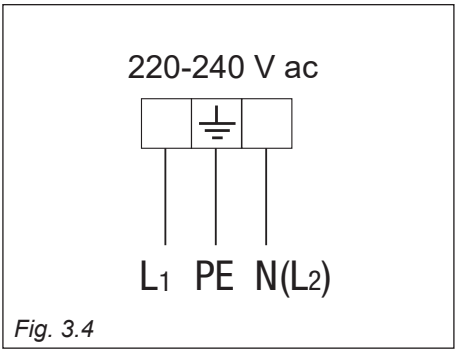

Fig. 3.4

Advice for the users

1 - COOKING HOB

Fig. 1.1

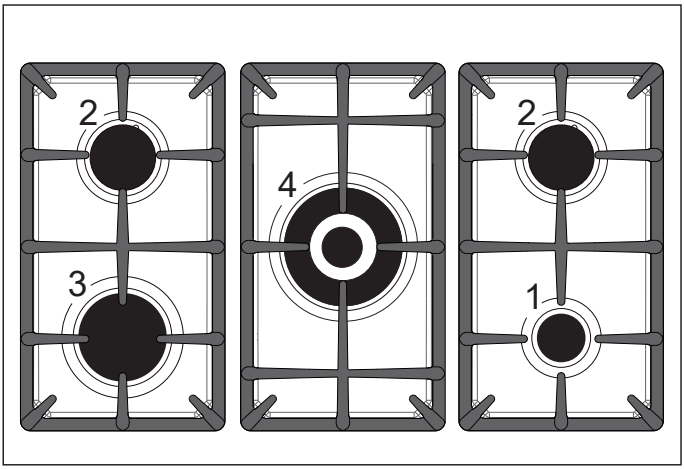

GAS BURNERS

1. Auxiliary burner (A)	1,00 kW
2. Semi-rapid burner (SR)	1,75 kW
3. Rapid burner (R)	3,00 kW
4. Double ring compact (DCC)	4,00 kW

Notes:

- The electric ignition is incorporated in the knobs.
- The appliance has a safety valve system fitted, the flow of gas will be stopped if and when the flame should accidentally go out.

CAUTION:
If the burner is accidentally extinguished, turn the gas off at the control knob and wait at least 1 minute before attempting to relight.

CAUTION:
Gas hobs produce heat and humidity in the environment in which they are installed.
Ensure that the cooking area is well ventilated by opening the natural ventilation grilles or by installing an extractor hood connected to an outlet duct that vents to the outside.

CAUTION:
If the hob is used for a prolonged time it may be necessary to provide further ventilation by opening a window or by increasing the suction power of the extractor hood (if fitted).

2 - CONTROL PANEL

Fig. 2.1

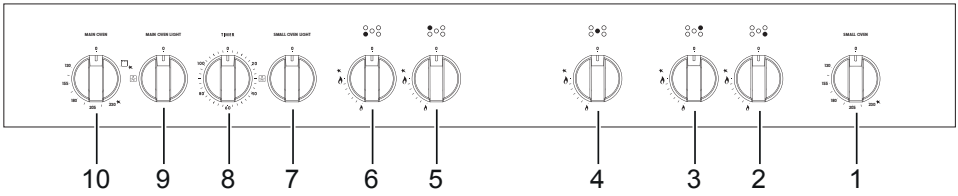

CONTROLS DESCRIPTION

1. Right small oven: Gas oven control knob
2. Front right burner control knob
3. Rear right burner control knob
4. Central burner control knob
5. Rear left burner control knob
6. Front left burner control knob
7. Right small oven: Oven light control knob
8. 120’ alarm knob
9. Left main oven: Oven light control knob
10. Left main oven: Gas oven / gas grill control knob

NOTE:
The knob and symbols may vary.

3 - USE OF THE HOB BURNERS

GAS BURNERS

Gas flow to the burners is adjusted by turning the knobs (illustrated in fig. 3.1) which control the safety valves.
Turning the knob, so that the indicator line points to the symbols printed on the panel, achieves the following functions:

- symbol ● closed valve
- symbol ★ maximum aperture or flow
- symbol minimum aperture or flow

√ The maximum aperture position permits rapid boiling of liquids, whereas the minimum aperture position allows slower warming of food or maintaining boiling conditions of liquids.

√ To reduce the gas flow to minimum rotate the knob further anti-clockwise to point the indicator towards the small flame symbol.

√ Other intermediate operating adjustments can be achieved by positioning the indicator between the maximum and minimum aperture positions, and never between the maximum aperture and closed positions.

N.B. When the cooker is not being used, set the gas knobs to their closed positions.

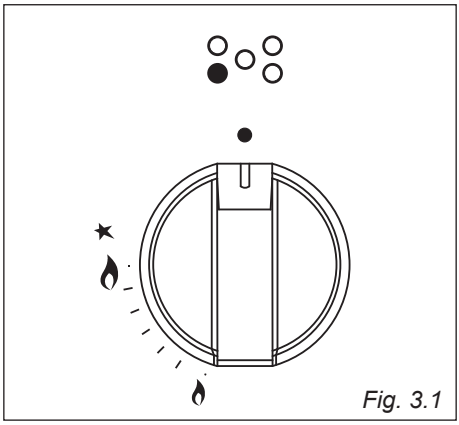

Fig. 3.1

NOTE:
The knob and symbols may vary.

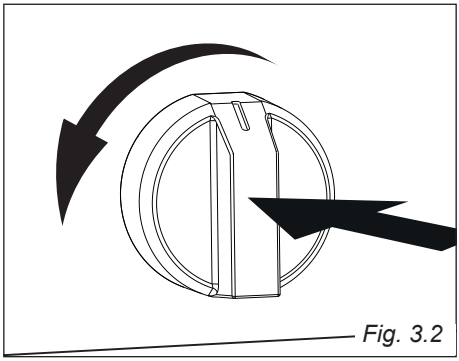

Fig. 3.2

Caution!
Do not cover the hob with aluminium foils.

Caution!
The cooking hob becomes very hot during operation.
Keep children well out of reach.

LIGHTING THE BURNERS

To ignite the burner, the following instructions are to be followed:

1. Press in the corresponding knob and turn counter-clockwise (fig. 3.2) to the full flame position marked by the symbol (fig. 3.1); hold the knob in until the flame has been lit.
   In the case of a mains failure light the burner with a match or lighted taper.
2. Wait for a few seconds after the gas burner has been lit before letting go of the knob (valve activation delay).
3. Adjust the gas valve to the desired position.

If the burner flame should go out for some reason, the safety valve will automatically stop the gas flow.
To re-light the burner, return the knob to the closed **0 position, wait for at least 1 minute** and then repeat the lighting procedure.

If your local gas supply makes it difficult to light the burner with the knob set to maximum, set the knob to minimum and repeat the operation.

DEEP FAT FRYING

For safety purposes when deep fat frying, do not fill the pan more than one third full of oil.
DO NOT cover the pan with a lid and DO NOT leave the pan unattended.
In the unfortunate event of a fire, leave the pan where it is and turn off the control knobs.
Place a damp cloth or lid over the pan to smother the flames. Leave the pan to cool for at least 30minutes before moving the pan.
DO NOT USE WATER ON THE FIRE.

CHOICE OF THE BURNER

On the control panel, near every knob there is a diagram that indicates which burner is controlled by that knob.
The suitable burner must be chosen according to the diameter and the capacity used.
The burners and pans must be used in accordance with the following instructions:

DIAMETERS OF PANS WHICH MAY BE USED ON THE BURNERS

BURNERS	MINIMUM	MAXIMUM
Auxiliary	12 cm	14 cm
Semi-rapid	16 cm	24 cm
Rapid	24 cm	26 cm
Double-ring compact	26 cm	28 cm
Wok	max 36 cm	

do not use pans with concave or convex bases

It is important that the diameter of the pot be suitable to the potentiality of the burner so as not to compromise the high output of the burners and therefore energy waste. A small pot on a large burner does not give you a boiling point in a shorter amount of time since the capacity of heat absorption of a liquid mass depends on the volume and the surface of the pot. Too large a pot can cause damage to the burner and surrounding hob area.

CAUTION: Make sure the pans are central to the burner for maximum stability and greater efficiency.
Make sure the pans are not in contact with the control knobs, otherwise the flame could overheat the knobs and permanently damage them.

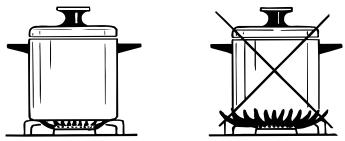

Fig. 3.3

CORRECT USE OF THE DOUBLE-RING COMPACT BURNER

Only flat bottom pans of the correct size are to be placed on the pan support above the Double-ring compact burner.
When using a WOK, the supplied wok stand **must** be placed onto the pan stand to avoid any faulty operation of the double-ring compact burner (fig. 3.4a). The wok **should not** be placed directly onto the pan support without the use of the supplied wok stand (fig. 3.4b).

IMPORTANT:

When using the wok stand it MUST ONLY BE PLACED over the pan support for the double-ring compact burner (fig.3.4a). **Under no circumstances should the wok stand be placed under the pan supports** (figs 3.5a - 3.5b). Incorrect placement of the wok stand in this manner may impinge the flame resulting in incomplete combustion and give rise to harmful levels of Carbon Monoxide (CO).

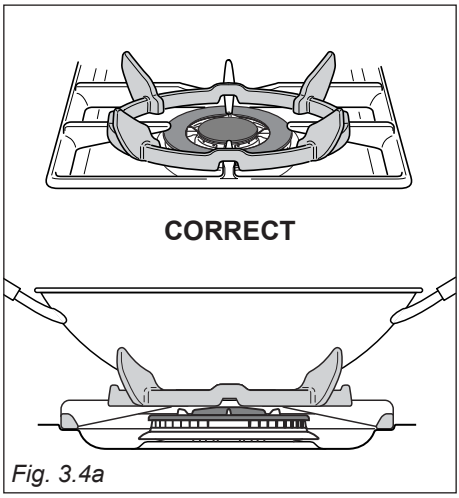

Fig. 3.4a

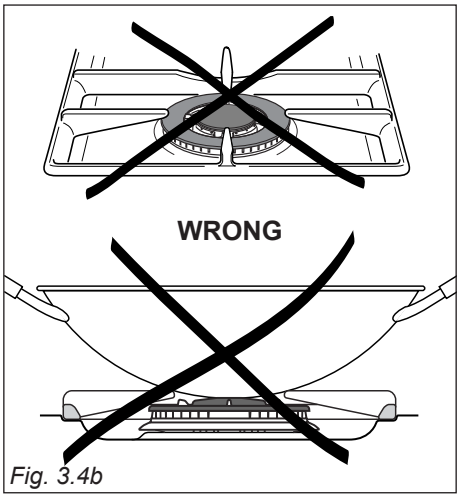

Fig. 3.4b

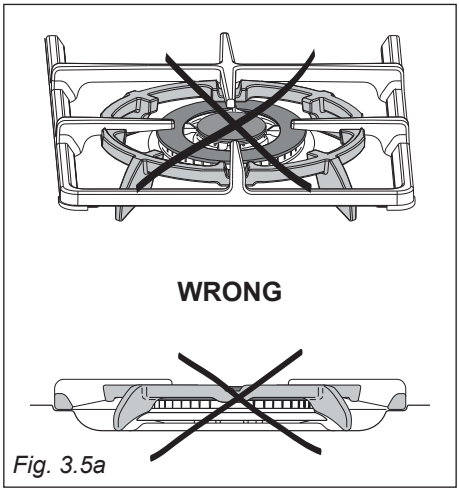

Fig. 3.5a

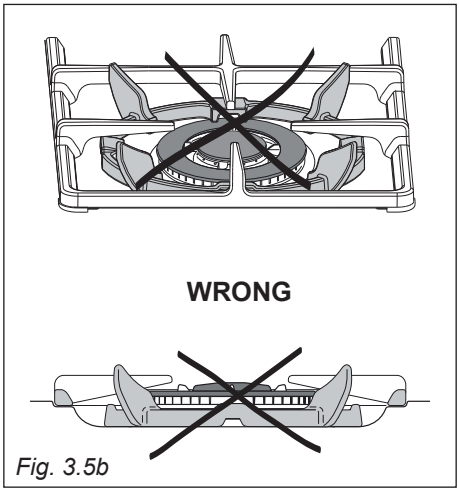

Fig. 3.5b

4 - LEFT MAIN GAS OVEN WITH GRILL

WARNING:

The door is hot, use the handle.

During use the appliance becomes hot. Care should be taken to avoid touching heating elements inside the oven.

GENERAL FEATURES

It is advisable, upon first use, to turn the oven on to the maximum temperature (position 230 ★) to eliminate possible traces of grease from the oven burner.
The same operation should be followed for the grill burner.

The gas oven is provided with two burners:

a. Oven burner, mounted on the lower part of the oven (wattage: 3,70 kW) providing safety device and electric ignition.
b. Grill burner, mounted on the upper part of the oven (wattage: 2,50 kW) providing safety device and electric ignition.

Smells and fumes produced during this burn off process are not a cause of alarm. Adequate ventilation should however be provided in the room where the appliance is installed, e.g. by opening a window.

OVEN BURNER

It carries out normal “oven cooking”.
The gas flow to the burner is regulated by a thermostat which allow to maintain the oven temperature constant.
The control of the temperature is assured by a thermostatic probe positioned inside the oven.
The probe must be always kept in its housing, in a clean condition, as an incorrect position or encrustment may cause an alteration in the control of the temperature.

CAUTION:
To assure a correct air flow to the burner, make sure there is no material in the warming drawer during operation of the gas oven.

THERMOSTAT

The temperature knob is numbered from 130 to 230 ★ (fig. 4.1) indicating the increasing oven temperature value (see table 4.2).
The thermostat which regulates the flow of gas to the oven burner has a safety valve which automatically shuts off the gas supply when the flame goes out.
The temperature is kept constant on the regulated value.

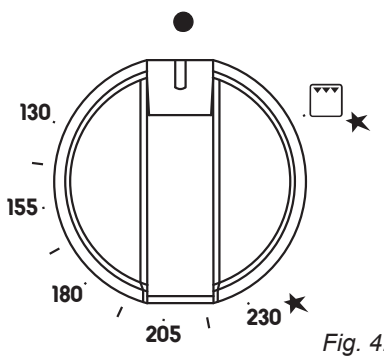

Fig. 4.1

Table 4.2

TEMPERATURE CHART	
Gas Marking	**Oven temperature**
130	130 °C
●	142 °C
155	155 °C
●	168 °C
180	180 °C
●	192 °C
205	205 °C
●	218 °C
230	230 °C
★	240 °C

IGNITION OF THE OVEN BURNER

ATTENTION: Never turn the control knob before opening the oven door.

To light the oven burner operate as follows:

1. **Open the oven door to the full extent. WARNING: Risk of explosion! The oven door must be open during this operation.**
2. Lightly press and turn the thermostat knob anti-clockwise (fig. 4.4) to max position 230 ★ (fig. 4.1). Press the knob firmly until the burner lights.

   Never continue this operation for more than 15 seconds. If the burner has still not ignited, wait for about 1 minute prior to repeating the ignition.

   In case of mains failure, press the knob firmly and immediately approach a lighted match or taper to the opening "**A**" (fig. 4.3).
3. Wait a few seconds after the burner lighting before releasing the knob (time of priming of the valve).
4. Close the oven door slowly and adjust the burner according to the power required.

If the flame extinguishes for any reason, the safety valve will automatically shut off the gas supply to the burner.
To re-light the burner, first turn the oven control knob to the off position ●, **wait for at least 1 minute** and then repeat the lighting procedure.

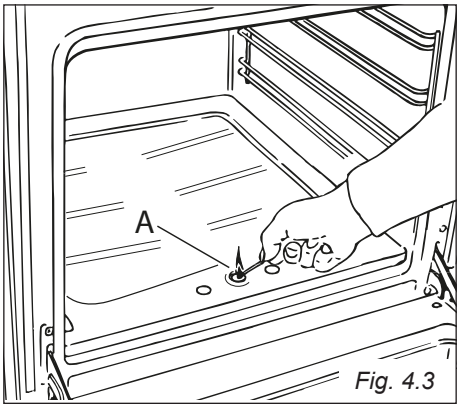

Fig. 4.3

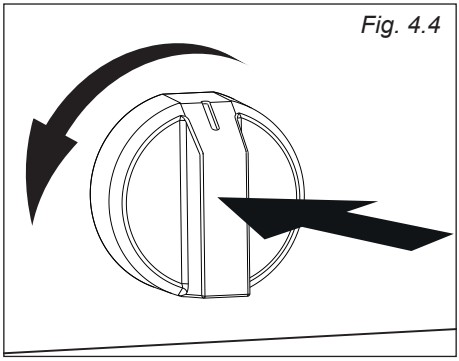
Fig. 4.4

OVEN COOKING

Before introducing the food, preheat the oven to the desired temperature.
For a correct preheating operation, it is advisable to remove the tray from the oven and introduce it together with the food, when the oven has reached the desired temperature.
Check the cooking time and turn off the oven 5 minutes before the theoretical time to recuperate the stored heat.

For correct use of the gas oven, always preheat it (bottom burner) for at least 15 minutes.
Preheating should always be carried out with the oven empty: remove the trays and racks from the oven cavity.

IGNITION OF THE GRILL BURNER

IMPORTANT: The grill must always be used with the oven door ajar and with shield "A" mounted (fig. 4.7).
Do not grill with the oven door closed.

Attention: The oven door becomes very hot during operation.
Keep children away.

WARNING. The heat shield and the oven door reach a very high temperature whilst in use.

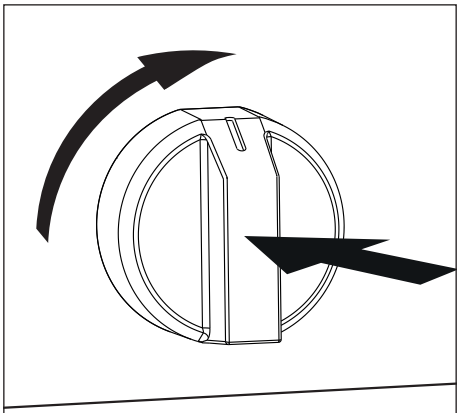

Fig. 4.5

1. **Open the oven door to the full extent. WARNING: Risk of explosion! The oven door must be open during this operation.**
2. Lightly press and turn the thermostat knob clockwise (fig. 4.5) to the position ★ (fig. 4.1).
3. Press the knob firmly until the burner lights.

   Never continue this operation for more than 15 seconds. If the burner has still not ignited, wait for about 1 minute prior to repeating the ignition.

   In case of mains failure, press the knob firmly and immediately approach a lighted match or taper to the pipe of the burner (fig. 4.6).
4. Wait a few seconds after the burner lighting before releasing the knob (time of priming of the valve).
   Do not close the oven door completely. The grill must always be used with the oven door slightly open and with shield "A" mounted (fig. 4.7).
   See specific instructions in the section 'USE OF THE GRILL'.

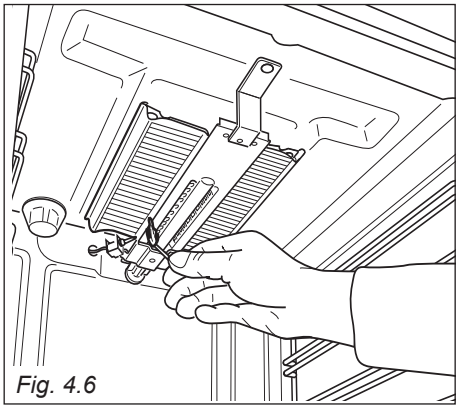

Fig. 4.6

If the flame extinguishes for any reason, the safety valve will automatically shut off the gas supply to the burner.
To re-light the burner, first turn the grill control knob to position ●, **wait for at least 1 minute** and then repeat the lighting procedure.

USE OF THE GRILL

Very important: the grill must always be used with the oven door slightly open and with shield "A" mounted (fig. 4.7).

Mount shield "**A**" which serves to protect the control panel from the heat.
Turn on the grill, as explained in the preceding paragraphs and let the oven preheat for about 5 minutes with the door ajar.
Introduce the food to be cooked, positioning the rack as close to the grill as possible.
The drip tray should be placed under the rack to catch the cooking juices and fats.

Note: It is recommended that you do not grill for longer than 30 minutes at any one time (Grilling for longer than the recommended time may mean the appliance overheats).

Attention: the oven door becomes very hot during operation.
Keep children away.

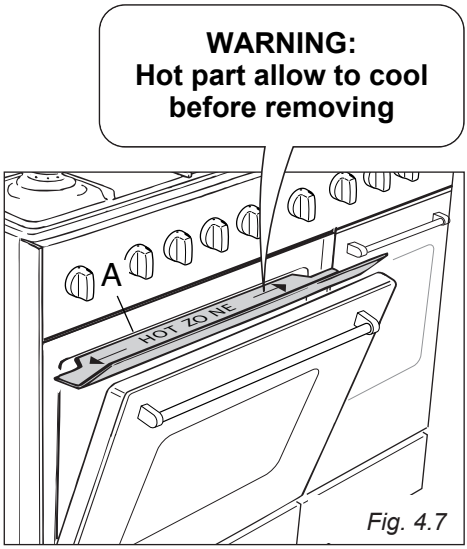

Fig. 4.7

Notes:

- The grill burner has only one setting, that is full-on
- It is important that the heat shield is fitted the correct way up, as shown in the figure 4.7.

IMPORTANT WARNING

For best results when using the grill, place the shelf on the second level and when using the grill pan handle **avoid contact with the heat shield which will be HOT during use.**

OVEN LIGHT

The cooker is equipped with a light that illuminates the oven to enable visually controlling the food that is cooking.

This light is controlled by a control knob (fig. 4.8).

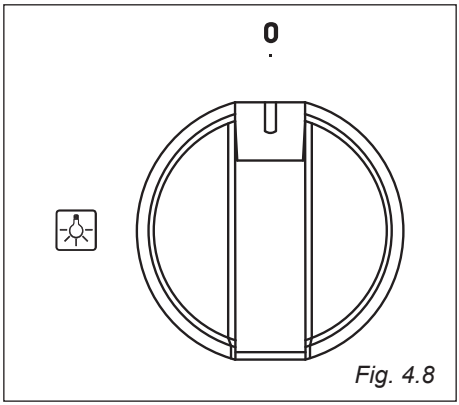

Fig. 4.8

5 - RIGHT SMALL GAS OVEN

WARNING:

The door is hot, use the handle.

During use the appliance becomes hot. Care should be taken to avoid touching heating elements inside the oven.

GENERAL FEATURES

It is advisable, upon first use, to turn the oven on to the maximum temperature (position 230 ★) to eliminate possible traces of grease from the oven burner.

The gas oven is provided with one burner:

a. Oven burner, mounted on the lower part of the oven (wattage: 2,20 kW) providing safety device and electric ignition.

Smells and fumes produced during this burn off process are not a cause of alarm. Adequate ventilation should however be provided in the room where the appliance is installed, e.g. by opening a window.

OVEN BURNER

It carries out normal “oven cooking”.
The gas flow to the burner is regulated by a thermostat which allow to maintain the oven temperature constant.
The control of the temperature is assured by a thermostatic probe positioned inside the oven.
The probe must be always kept in its housing, in a clean condition, as an incorrect position or encrustment may cause an alteration in the control of the temperature.

CAUTION:
To assure a correct air flow to the burner, make sure there is no material in the warming drawer during operation of the gas oven.

TEMPERATURE CONTROL

The temperature knob is numbered from 130 to 230 ★ (fig. 5.1) indicating the increasing oven temperature value (see table 5.2).
The thermostat which regulates the flow of gas to the oven burner has a safety valve which automatically shuts off the gas supply when the flame goes out.
The temperature is kept constant on the regulated value.

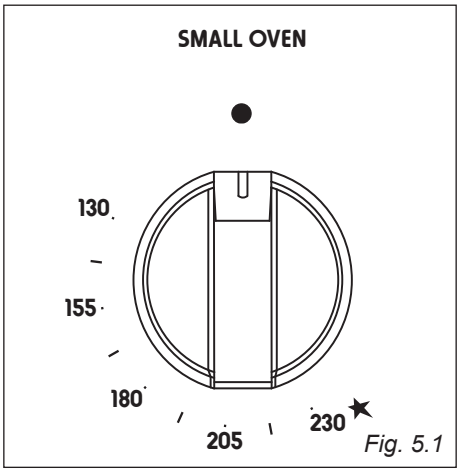

Fig. 5.1

Table 5.2

TEMPERATURE CHART	
Gas Marking	**Oven temperature**
130	130 °C
●	142 °C
155	155 °C
●	168 °C
180	180 °C
●	192 °C
205	205 °C
●	218 °C
230	230 °C
★	240 °C

IGNITION OF THE OVEN BURNER

ATTENTION: Never turn the control knob before opening the oven door.

To light the oven burner operate as follows:

1. **Open the oven door to the full extent. WARNING: Risk of explosion! The oven door must be open during this operation.**
2. Lightly press and turn the thermostat knob anti-clockwise (fig. 5.4) to max position 230 ★ (fig. 5.1). Press the knob firmly until the burner lights.

   Never continue this operation for more than 15 seconds. If the burner has still not ignited, wait for about 1 minute prior to repeating the ignition.

   In case of mains failure, press the knob firmly and immediately approach a lighted match or taper to the opening "**F**" (fig. 5.3).
3. Wait a few seconds after the burner lighting before releasing the knob (time of priming of the valve).
4. Close the oven door slowly and adjust the burner according to the power required.

If the flame extinguishes for any reason, the safety valve will automatically shut off the gas supply to the burner.
To re-light the burner, first turn the oven control knob to the off position ●, **wait for at least 1 minute** and then repeat the lighting procedure.

OVEN COOKING

Before introducing the food, preheat the oven to the desired temperature.
For a correct preheating operation, it is advisable to remove the tray from the oven and introduce it together with the food, when the oven has reached the desired temperature.
Check the cooking time and turn off the oven 5 minutes before the theoretical time to recuperate the stored heat.

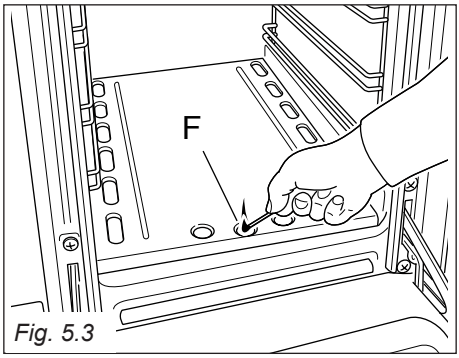

Fig. 5.3

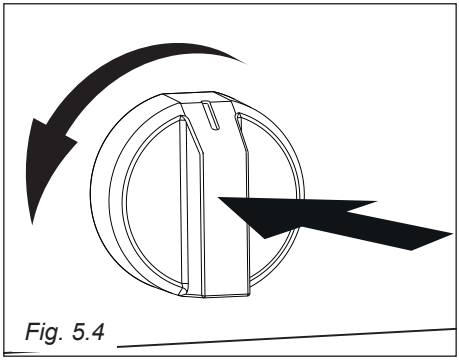
Fig. 5.4

OVEN LIGHT

The cooker is equipped with a light that illuminates the oven to enable visually controlling the food that is cooking.

This light is controlled by a control knob (fig. 5.5).

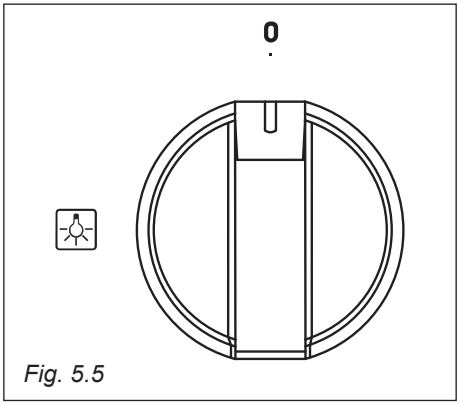

Fig. 5.5

6 - OVEN TEMPERATURE GUIDE

Cooking process	Oven heat	Gas mark	Electric oven temperature	
			°C	°F
Keeping food hot, milk puddings	very cool	½	120	250
Egg custards	cool	1	140	275
Rich fruit cakes, braising	cool	2	150	300
Low temperature roasting, shortbread	moderate	3	160	325
Victoria sandwich, plain fruit cake, baked fish	moderate	4	180	350
Small cakes, choux pastry	fairly hot	5	190	375
Short pastry, Swiss rolls, soufflés	fairly hot	6	200	400
High temperature roasting, flaky pastry, scones	hot	7	220	425
Puff pastry, bread	very hot	8	230	450
Small puff pastries, browning cooked foods	very hot	9	240	475

These temperatures relate to the centre oven temperature.

Remember to use ovenproof dishes and to adjust the oven temperature during cooking if necessary.

7 - 120 MINUTE TIMER

120 MINUTE TIMER (fig. 7.1)

The timer can be set to a maximum of 120 minutes and a buzzer will sound at the end of the countdown.
The knob must be rotated clockwise as far as the 120 minute position first and then set to the required time by rotating it anticlockwise.

IMPORTANT WARNING: This is only a mechanical timer.
Remember to turn off the oven/grill manually.

NOTE:
The knob and symbols may vary.

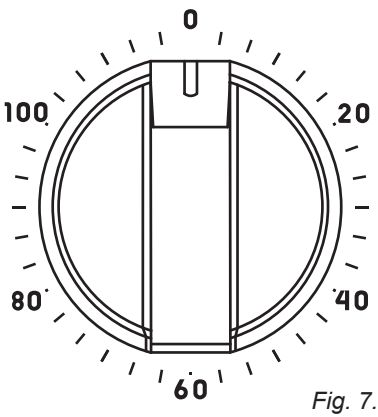

Fig. 7.1

8 - CLEANING AND MAINTENANCE

GENERAL ADVICE

- **Before you begin cleaning, you must ensure that the appliance is switched off at the cooker switch.**
- The periodical lubrication of the gas taps must be done only by specialized personnel.
- If a tap becomes stiff, do not force; contact your local After Sales Service Centre.
- It is advisable to clean when the appliance is cold and especially when cleaning the enamelled parts.
- Avoid leaving alkaline or acidic substances (lemon juice, vinegar, etc.) on the surfaces.
- **Avoid using cleaning products with a chlorine or acidic base.**
- **Important: The use of suitable protective clothing/gloves is recommended when handling or cleaning this appliance.**
- **Under no circumstances should any external covers be removed for servicing or maintenance except by suitable qualified personnel.**

WARNING:
When correctly installed, your product meets all safety requirements laid down for this type of product category.
However special care should be taken around the rear or the underneath of the appliance as these areas are not designed or intended to be touched and may contain sharp or rough edges, that may cause injury.

CLEANING

- **Stainless steel hob:** Spillage on the hob can usually be removed by a damp soapy cloth. More obstinate stains can be removed by using a proprietary stainless steel cleaning product that does not contain chlorine or acidic base.
- **Control panel facia:** Clean very carefully with water and neutral soap; the cloth used must be rinsed well and must be free of any cleaning chemicals to avoid damaging any screen print on the facia.
- **Door, glass & painted surfaces:** Clean very carefully with water and neutral soap; the cloth used must be rinsed well and must be free of any cleaning chemicals.
- **Pan stands & burner caps:** Clean with a sponge and soapy water or proprietary cream cleaner. Always dry throughly. DO NOT PUT IN THE DISHWASHER.
- **Burner bodies (aluminium alloy):** They should be cleaned with soapy water and a clean cloth. For stubborn stains a proprietary cream or stainless steel cleaner may be used; however to maintain an uniform finish we would recommend the whole area is cleaned. NOTE: Please ensure the slots/castlellations are kept free of any material/cleaner.

Important: The manufacturer declines all liability for possible damage caused by the use of unsuitable products to clean the appliance.

Attention!
The appliance gets very hot, mainly around the cooking areas. It is very important that children are not left alone in the kitchen when you are cooking.

Do not use a steam cleaner because the moisture can get into the appliance thus make it unsafe.

Do not use harsh abrasive cleaners or sharp metal scrapers to clean the oven door glass since they can scratch the surface, which may result in shattering of the glass.

- **Inside of oven:** The oven should always be cleaned after use when it has cooled down. The cavity should be cleaned using a mild detergent solution and warm water. Suitable proprietary chemical cleaners may be used only on enamel after first consulting the instructions supplied with the oven cleaner and testing a small sample on the oven cavity. Abrasive cleaning agents or scouring pads/cloths should not be used on the cavity surface.

  NOTE: The manufacturers of this appliance will accept no responsibility for damage caused by chemical or abrasive cleaning.

  Let the oven cool down and pay special attention not to touch the hot heating elements inside the oven cavity.

CORRECT REPLACEMENT OF THE AUXILIARY, SEMI-RAPID AND RAPID BURNERS

It is very important to check that the burner flame distributor "**F**" and the cap "**C**" have been correctly positioned (see figs. 8.1, 8.2) - failure to do so can cause serious problems with correct combustion and may cause irreversible damage to the hob surface.

CORRECT REPLACEMENT OF THE DOUBLE-RING COMPACT BURNER

The double-ring compact burner must be correctly positioned (see fig. 8.5); the burner rib must be enter in their logement as shown by the arrow (see fig. 8.3).
Then position the cap "**A**" and the ring "**B**" (figs. 8.4, 8.5).
The burner correctly positioned must not rotate (fig. 8.4).

failure to do so can cause serious problems with correct combustion and may cause irreversible damage to the hob surface.

BURNERS AND PAN SUPPORTS

These parts must be cleaned using a sponge and soapy water or other suitable non-abrasive products. Dry with a soft cloth.
Warning! Not dishwasher safe.
After cleaning, the burners and their flame spreaders must be well dried and correctly replaced.
It is very important to check that the burner flame spreader and the cap have been correctly positioned. Failure to do so can cause serious problems with correct combustion and may cause irreversible damage to the hob surface.
Check that the electrode "**S**" (figs. 8.1, 8.3) next to each burner is always clean to ensure trouble-free sparking.
Check that the probe "**T**" (figs. 8.1, 8.3) next to each burner is always clean to ensure correct operation of the safety valves.

Both the probe and ignition plug must be very carefully cleaned.

Note: To avoid damage to the electric ignition do not use it when the burners are not in place.

Note: Continuous use may cause a change in the glaze around the burners and grids, corresponding to the areas exposed to the heat. This is a natural phenomenon and does not prevent the parts from working properly.

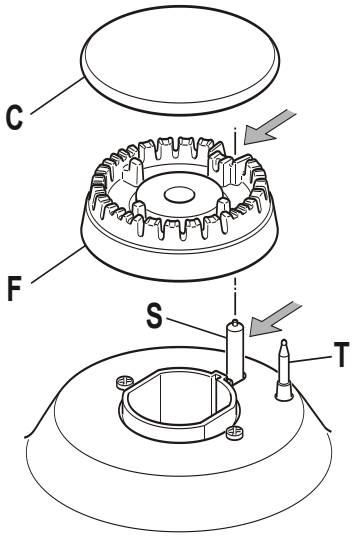

Fig. 8.1

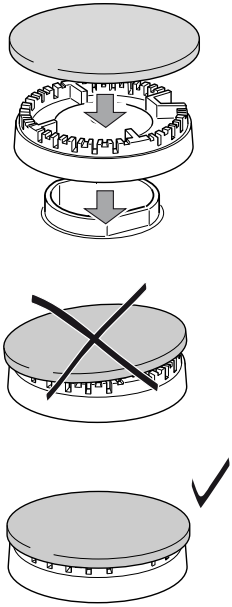

Fig. 8.2

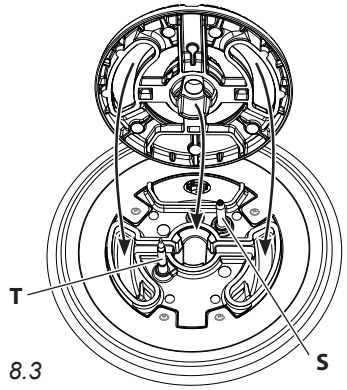

Fig. 8.3

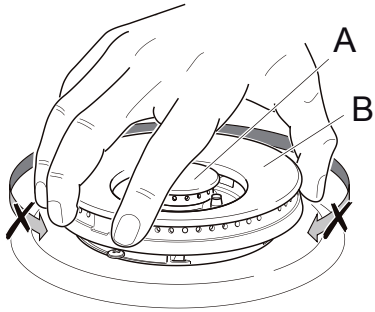

Fig. 8.4

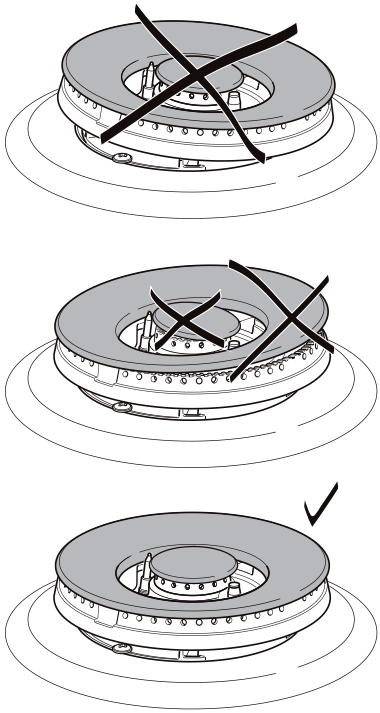

Fig. 8.5

ASSEMBLY AND DISMANTLING OF THE SIDE RUNNER FRAMES

- Fit the side runner frames into the holes on the side walls inside the oven (fig. 8.6).
- Slide into the guides, the shelf and the tray (fig. 8.6a).

  The rack must be fitted so that the safety notch, which stops it sliding out, faces the inside of the oven; the guard rail shall be at the back.
- To dismantle, operate in reverse order.

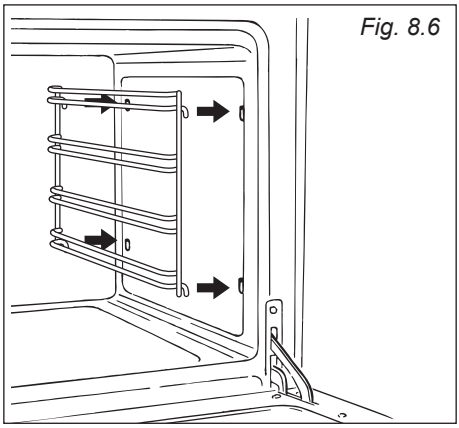

Fig. 8.6

OVEN TRAY

The oven tray "**L**" must be inserted into the side runners (fig. 8.7).

OVEN FLOOR

The oven floor "**F**" (fig. 8.7a) can be easily removed to facilitate cleaning.
Remember to replace the floor correctly afterwards.
Be careful not to confuse the tray "**L**" with the oven floor "**F**".

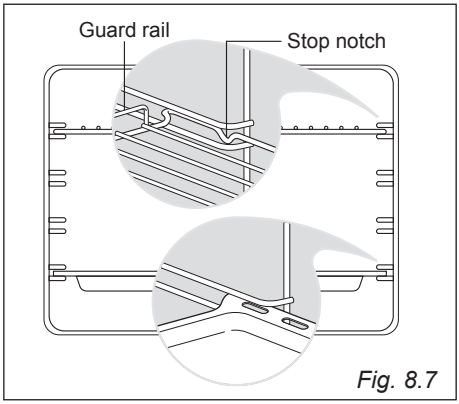

Fig. 8.7

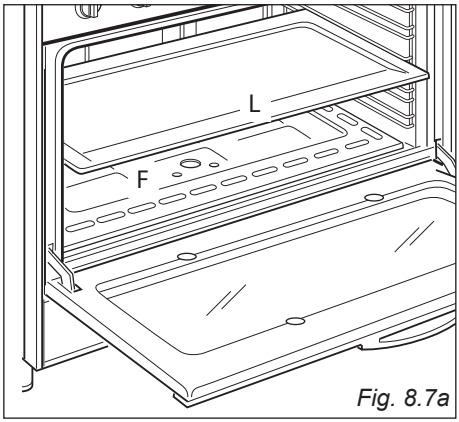

Fig. 8.7a

STORAGE COMPARTMENT

The storage compartment is accessible through the pivoting panel (fig. 8.8).

Do not store flammable material in the oven or in the storage compartment.

CAUTION: To assure a correct air flow to the burner, make sure there is no material in the warming drawer during operation of the gas oven.

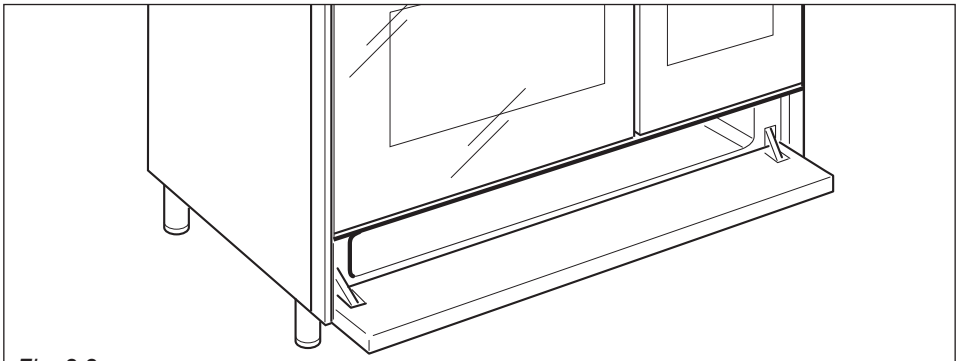

Fig. 8.8

OVEN DOORS

The internal glass panel can be easily removed for cleaning by unscrewing the retaining screws (fig. 8.9).

Attention: The oven door becomes very hot during operation.
Keep children away.

Do not use harsh abrasive cleaners or sharp metal scrapers to clean the oven door glass since they can scratch the surface, which may result in shattering of the glass.

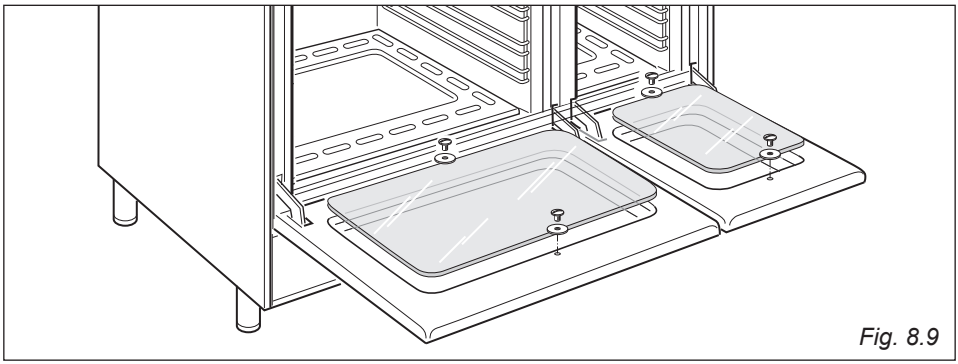

Fig. 8.9

REPLACING THE OVEN LAMP

WARNING: Ensure the appliance is switched off and disconnected from the electrical power supply before replacing the lamp to avoid the possibility of electric shock.

- Let the oven cavity and the heating elements cool down.
- Switch off the electrical supply.
- Remove the protective cover "**A**" (fig. 8.10).
- Replace the halogen lamp "**C**" with a new one suitable for high temperatures (300°C) having the following specifications: 230 V, 50 Hz and same power (check watt power as stamped in the lamp itself) of the replaced lamp.

  IMPORTANT WARNING: Never replace the bulb with bare hands; contamination from your fingers can cause premature failure. Always use a clean cloth or gloves.
- Refit the protective cover.

Note: Oven lamp replacement is not covered by your guarantee.

The intended purpose of the lamps, fitted on this appliance, is to illuminate the oven cavity and thus help the user to better monitor the food while cooking. These lamps are not suitable for other usage (e.g. environments lighting).

This product contains more than one light source of energy efficiency class G.

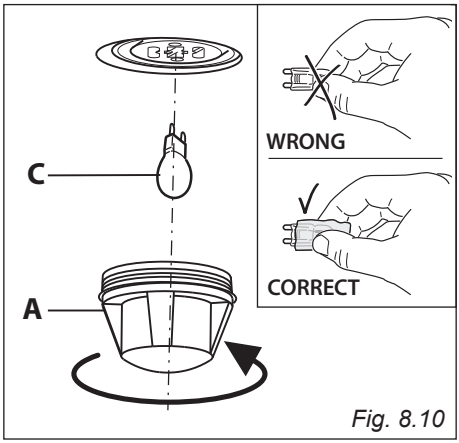

Fig. 8.10

REMOVING THE OVEN DOOR

The oven door can easily be removed as follows:

- Open the door to the full extent (fig. 8.11a).
- Open the lever “**A**” completely on the left and right hinges (fig. 8.11b).
- Hold the door as shown in fig. 8.11.
- Gently close the door (fig. 8.11c) until left and right hinge levers “**A**” are hooked to part “**B**” of the door (fig. 8.11b).
- Withdraw the hinge hooks from their location following arrow “**C**” (fig. 8.11d).
- Rest the door on a soft surface.
- To replace the door, repeat the above steps in reverse order.

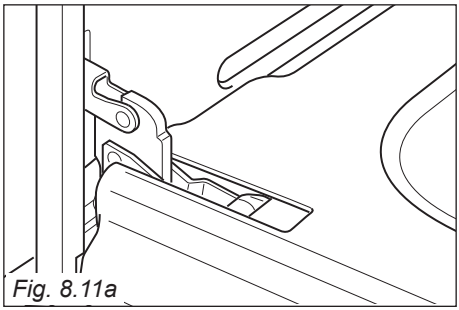

Fig. 8.11a

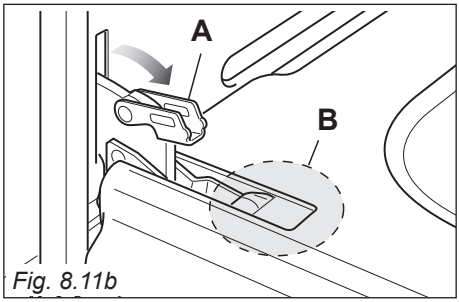

Fig. 8.11b

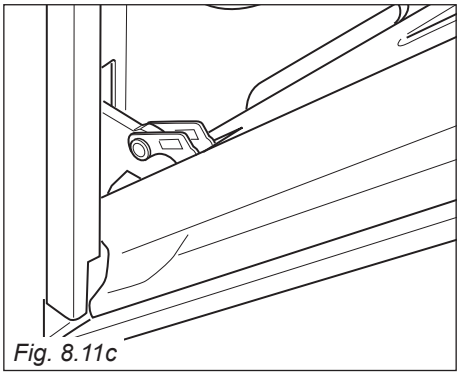

Fig. 8.11c

Important!

Always keep a safe distance from the door hinges, paying special attention to the position of your hands.

If the door hinges are not correctly hooked, they could unhook and close suddenly and unexpectedly with risk of injury.

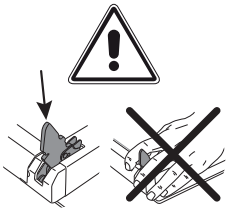

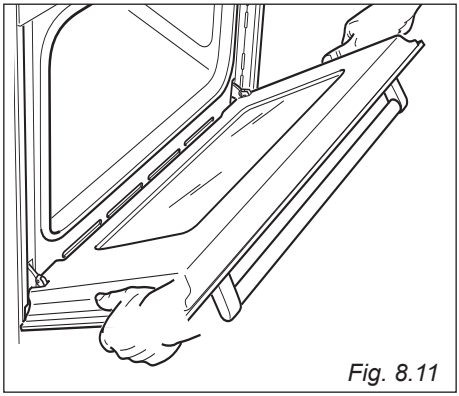

Fig. 8.11

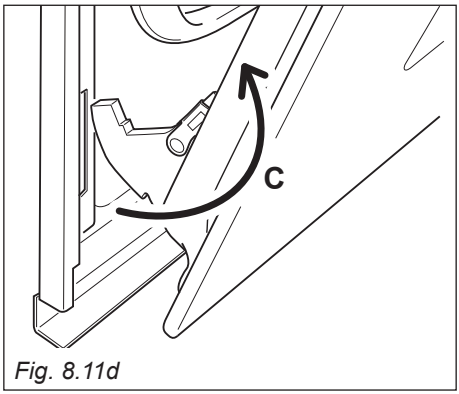

Fig. 8.11d

9 - GUARANTEE

Your new **"KENWOOD"** product comes with 12-month guarantee covering all parts and labour.

If your appliance proves to be defective as a result of faulty materials or workmanship during the guarantee period, these parts will be repaired or replaced free of charge.

AFTER SALES SERVICE

Should you require service, spares or product information and advice:

- Please Telephone 0121 817 3628 (UK).
- Details of your purchase receipt will be required if you require service within the first 12-month of purchase.

1. The rights and benefits under this guarantee are additional to your statutory rights, which are not affected by this guarantee.
2. The manufacturer undertakes within the specified period, to repair or replace free of charge any parts of the appliance found to be defective provided that:
   - We are promptly informed of the defect.
   - The appliance is installed and used in accordance with the written instructions enclosed with the appliance.
   - The appliance is used only on an electrical supply as indicated on the rating label fixed to the appliance.
   - The appliance has not been altered in any way or subject to misuse or repaired by a person other than an authorised service agent.
3. No rights are given under this guarantee to a person acquiring the appliance second hand or for commercial, semi-commercial or communal use.
4. This guarantee applies throughout the UK and Channel Islands.
5. Any repaired or replacement appliances will be guaranteed on these terms for the unexpired portion of the guarantee.

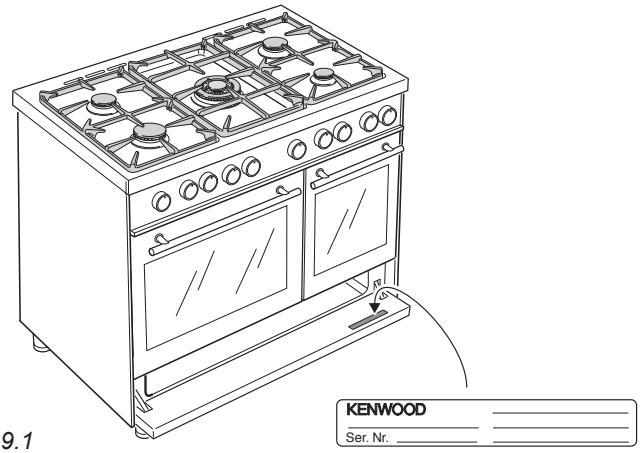

Fig. 9.1

The manufacturer cannot be held responsible for possible inaccuracies due to printing or transcription errors in the present booklet.
The manufacturer reserves the right to make all modifications to its products deemed necessary for manufacture or commercial reasons at any moment and without prior notice, without jeopardising the essential functional and safety characteristics of the appliances.

KENWOOD

Code: 1106297 - ß3