DUAL FUEL TRIPLE OVEN COOKER

model CK 503

Instructions for use - Installation advice

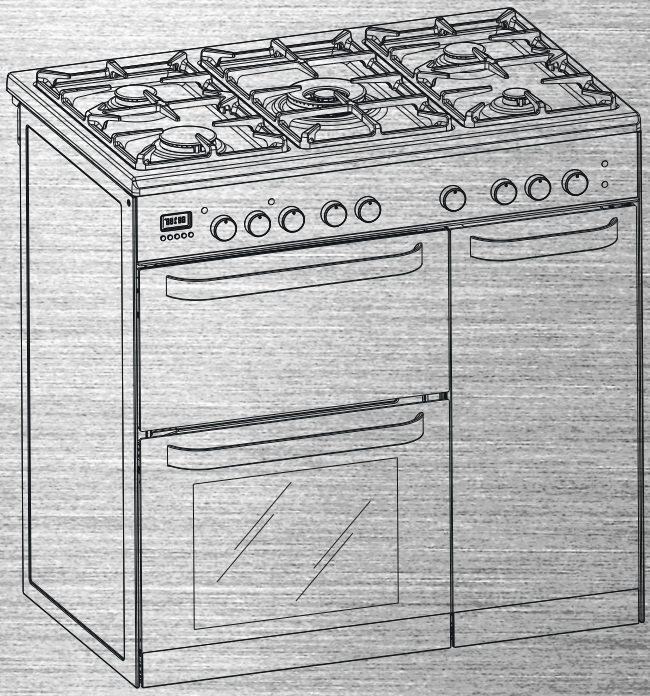

CE GB

KENWOOD

Before operating this cooker,
please read these instructions carefully

CONTENTS

Page Number

Introduction 3
Important Safeguards & Recommendations 4-7
Cooking Hob 8
Control Panel 9
Use of hob burners . . . . . 10 - 12
How to use the multifunction bottom main oven . . . . . 13 - 16
How to use the top small grill 17
How to use the tall oven 18
Oven temperature guide 19
Electronic programmer . . . . . 20 - 25
Cleaning & maintenance . . . . . 26 - 37

Advice For The Installer 38
Installation . . . . . 39 - 42
Gas installation . . . . . 43 - 48
Electrical section . . . . . 49 - 50

Guarantee & After Sales Service 51

Dear Customer,

Thank you for purchasing a Kenwood CK 503 dual fuel triple oven cooker.

The safety precautions and recommendations reported below are for your own safety and that of others. They will also provide a means by which to make full use of the features offered by your appliance.

Please preserve this booklet carefully. It may be useful in future, either to yourself or to others in the event that doubts should arise relating to its operation.

This appliance must be used only for the task it has explicitly been designed for, that is for cooking foodstuffs. Any other form of usage is to be considered as inappropriate and therefore dangerous.

The manufacturer declines all responsibility in the event of damage caused by improper, incorrect or illogical use of the appliance.

DECLARATION OF CE CONFORMITY

- This appliance has been designed to be used only for cooking. Any other use (such as heating a room) is improper and dangerous.
- This appliance has been designed, constructed, and marketed in compliance with:
  - Safety requirements of the “Gas” Directive 2009/142/EC;
  - Safety requirements of the “Low voltage” Directive 2014/35/EU;
  - Safety requirements of the “EMC” Directive 2014/30/EU;
  - Requirements of EU Directive 93/68/EEC;
  - Requirements of EU Directive 2011/65/EU.

CE GB

IMPORTANT INFORMATION FOR CORRECT DISPOSAL OF THE PRODUCT IN ACCORDANCE WITH EC DIRECTIVE 2012/19/EC.

At the end of its working life, the product must not be disposed of as urban waste. It must be taken to a special local authority differentiated waste collection centre or to a dealer providing this service.
Disposing of a household appliance separately avoids possible negative consequences for the environment and health deriving from inappropriate disposal and enables the constituent materials to be recovered to obtain significant savings in energy and resources. As a reminder of the need to dispose of household appliances separately, the product is marked with a crossed-out wheeled dustbin.

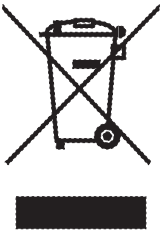

IMPORTANT SAFETY PRECAUTIONS AND RECOMMENDATIONS

IMPORTANT: This appliance is designed and manufactured solely for the cooking of domestic (household) food and is not suitable for any non domestic application and therefore should not be used in a commercial environment.
The appliance guarantee will be void if the appliance is used within a non domestic environment i.e. a semi commercial, commercial or communal environment.

Read the instructions carefully before installing and using the appliance.

- After having unpacked the appliance, check to ensure that it is not damaged and that the oven door closes correctly.
  In case of doubt, do not use it and consult your supplier or a professionally qualified technician.
- Packing elements (i.e. plastic bags, polystyrene foam, nails, packing straps, etc.) should not be left around within easy reach of children, as these may cause serious injuries.
- Some appliances are supplied with a protective film on steel and aluminium parts. **This film must be removed before using the appliance.**
- IMPORTANT: The use of suitable protective clothing/gloves is recommended when handling or cleaning of this appliance.
- Do not attempt to modify the technical characteristics of the appliance as this may become dangerous to use. The manufacturer declines all responsability for any inconvenience resulting from the inobservance of this condition.
- CAUTION: this appliance must only be installed in a permanently ventilated room in compliance with the applicable regulations.
- Do not carry out cleaning or maintenance operations on the appliance without having previously disconnected it from the electric power supply.
- WARNING: Ensure that the appliance is switched off before replacing the oven lamp to avoid the possibility of electric shock.
- Do not use a steam cleaner because the moisture can get into the appliance thus make it unsafe.

- Do not touch the appliance with wet or damp hands (or feet).
- Do not use the appliance whilst in bare feet.
- If you should decide not to use this appliance any longer (or decide to substitute another model), before disposing of it, it is recommended that it be made inoperative in an appropriate manner in accordance to health and environmental protection regulations, ensuring in particular that all potentially hazardous parts be made harmless, especially in relation to children who could play with unused appliances.
- The various components of the appliance are recyclable. Dispose of them in accordance with the regulations in force in your country. If the appliance is to be scrapped, remove the power cord.
- After use, ensure that the knobs are in the off position.
- Children less than 8 years of age shall be kept away unless continuously supervised.
- This appliance can be used by children aged from 8 years and above and persons with reduced physical, sensory or mental capabilities or lack of experience and knowledge if they have been given supervision or instruction concerning use of the appliance in a safe way and understand the hazards involved. Children shall not play with the appliance. Cleaning and user maintenance shall not be made by children without supervision.
- The manufacturer declines all liability for injury to persons or damage to property caused by incorrect or improper use of the appliance.
- WARNING: During use the appliance and its accessible parts become hot; they remain hot for some time after use.
  - Care should be taken to avoid touching heating elements (on the hob and inside the oven).
  - The door is hot, use the handle.
  - To avoid burns and scalds, young children should be kept away.
- Make sure that electrical cables connecting other appliances in the proximity of the cooker cannot come into contact with the hob or become entrapped in the oven door.
- WARNING: Unattended cooking on a hob with fat or oil can be dangerous and may result in fire. NEVER try to extinguish a fire with water, but switch of the appliance and then cover flame e.g. with a lid or a fire blanket.

- WARNING: Danger of fire: do not store items on the cooking surfaces.
- WARNING: When correctly installed, your product meets all safety requirements laid down for this type of product category. However special care should be taken around the rear or the underneath of the appliance as these areas are not designed or intended to be touched and may contain sharp or rough edges, that may cause injury.
- FIRST USE OF THE OVEN - it is advised to follow these instructions:
  - Furnish the interior of the oven as described at chapter “CLEANING AND MAINTENANCE”.
  - Switch on the empty oven on max to eliminate grease from the heating elements.
  - Disconnect the appliance from the electrical power supply, let the oven cool down and clean the interior of the oven with a cloth soaked in water and neutral detergent; then dry carefully.
- CAUTION: Do not use harsh abrasive cleaners or sharp metal scrapers to clean the oven door glass since they can scratch the surface, which may result in shattering of the glass.
- Do not line the oven walls or floor with aluminium foil. Do not place baking trays or the drip tray on the base of the oven chamber.
- FIRE RISK! Do not store flammable material in the oven or in the storage compartment.
- Always use oven gloves when removing the shelves and food trays from the oven whilst hot.
- Do not hang towels, dishcloths or other items on the appliance or its handle – as this could be a fire hazard.
- Clean the oven regularly and do not allow fat or oils to build up in the oven base or tray. Remove spillages as soon as they occur.
- Do not stand on the cooker or on the open oven door.
- Always stand back from the appliance when opening the oven door to allow steam and hot air to escape before removing the food.
- SAFE FOOD HANDLING: Leave food in the oven for as short a time as possible before and after cooking. This is to avoid contamination by organisms which may cause food poisoning. Take particular care during warmer weather.
- WARNING: Taking care NOT to lift the cooker by the door handle.

ENERGY LABELLING/ECODESIGN

- Commission delegated regulation (EU) No 65/2014 (supplementing Directive 2010/30/EU of the European Parliament and of the Council).
- Commission regulation (EU) No 66/2014 (implementing Directive 2009/125/EC of the European Parliament and of the Council).

Reference to the measurement and calculation methods used to establish compliance with the above requirements:

- Standard EN 60350-1 (electric ovens).
- Standard EN30-2-1 (hobs: gas fired burners).

USE OF THE APPLIANCE, ENERGY SAVING TIPS

OVEN

- Check the oven door always closes properly and the door gasket is clean and in order. During use, open the oven door only when strictly necessary to avoid heat losses (for some functions it may be necessary to use the oven with the door half-closed, check the oven operating instructions).
- Turn off the oven 5-10 minutes before the end of the theoretical cooking time to recuperate the stored heat.
- We recommend using oven proof dishes and adjusting the oven temperature during cooking if necessary.

HOB

GAS FIRED BURNERS

- It is important that the diameter of the pot be suitable to the size of the burner so as not to compromise the high output of the burners and therefore energy waste. A small pot on a large burner does not give you a boiling point in a shorter amount of time since the capacity of heat absorption of a liquid mass depends on the volume and the surface of the pot.
- Avoid keeping a burner on without something on it (without pot).

1 - COOKING HOB

Fig. 1.1

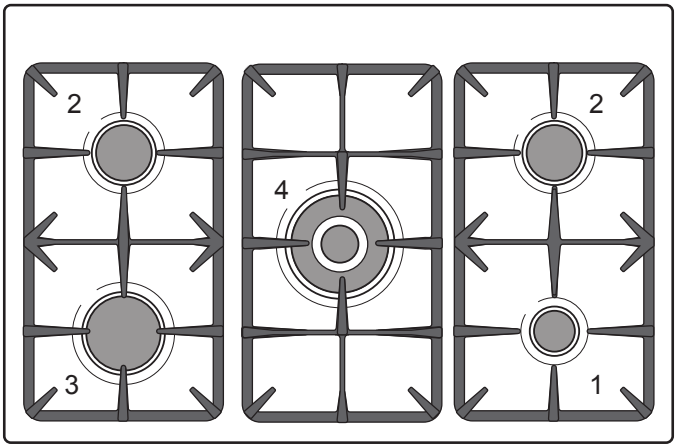

GAS BURNERS

1.	Auxiliary burner (A)	1,00 kW
2.	Semi-rapid burner (SR)	1,75 kW
3.	Rapid burner (R)	3,00 kW
4.	Triple-ring burner (TR)	4,00 kW

Notes:

- The electric ignition is incorporated in the knobs.
- The appliance has a safety valve system fitted, the flow of gas will be stopped if and when the flame should accidentally go out.

CAUTION:
If the burner is accidentally extinguished, turn the gas off at the control knob and wait at least 1 minute before attempting to relight.

CAUTION:
Gas hobs produce heat and humidity in the environment in which they are installed.
Ensure that the cooking area is well ventilated by opening the natural ventilation grilles or by installing an extractor hood connected to an outlet duct that vents to the outside.

CAUTION:
If the hob is used for a prolonged time it may be necessary to provide further ventilation by opening a window or by increasing the suction power of the extractor hood if fitted and vented to the outside.

2 - CONTROL PANEL

Fig. 2.1

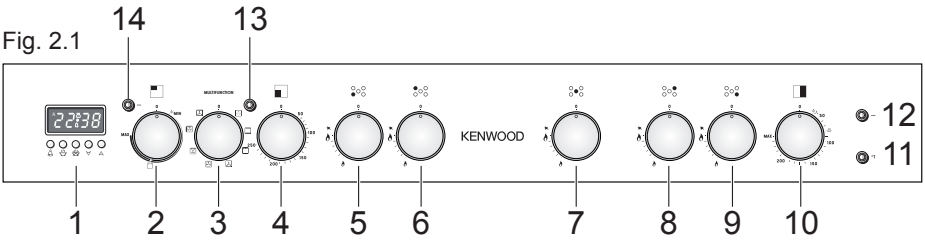

CONTROL PANEL - Controls description

1. Electronic programmer (main oven only)
2. Grill oven temperature knob (left small oven)
3. Multifunction oven switch knob
4. Multifunction oven thermostat knob
5. Front left burner control knob
6. Rear left burner control knob
7. Central burner control knob
8. Rear right burner control knob
9. Front right burner control knob
10. Fan oven thermostat knob (right oven)

Pilot lamps:

11. Fan oven temperature indicator light
12. Fan oven on indicator light
13. Multifunction oven temperature indicator light
14. Grill oven on indicator light

Please note: This appliance incorporates a safety cooling fan which you will hear operating whenever the oven or grill is being used.
The cooling fan may even run on after the appliance has been switched off.
The duration of this time is dependent on several factors, including previous cooking temperature, duration and ambient temperature. Times in excess of 30 minutes are not uncommon.

3 - USE OF THE HOB BURNERS

GAS BURNERS

Gas flow to the burners is adjusted by turning the knobs (illustrated in fig. 3.1) which control the safety valves.
Turning the knob, so that the indicator line points to the symbols printed on the panel, achieves the following functions:

- symbol **0** closed valve
- symbol ★ maximum aperture or flow
- symbol minimum aperture or flow

√ The maximum aperture position permits rapid boiling of liquids, whereas the minimum aperture position allows slower warming of food or maintaining boiling conditions of liquids.

√ To reduce the gas flow to minimum rotate the knob further anti-clockwise to point the indicator towards the small flame symbol.

√ Other intermediate operating adjustments can be achieved by positioning the indicator between the maximum and minimum aperture positions, and never between the maximum aperture and closed positions.

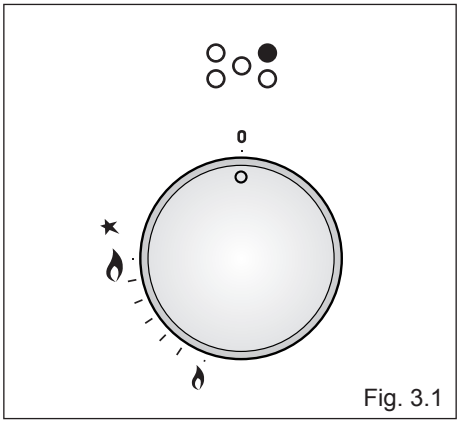

Fig. 3.1

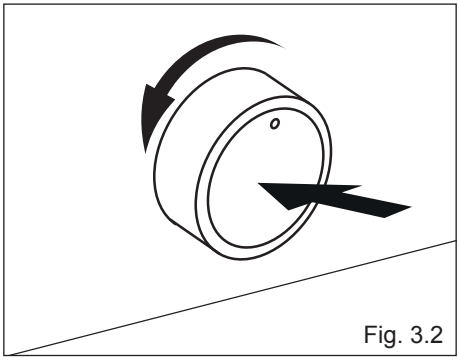
Fig. 3.2

N.B. When the cooker is not being used, set the gas knobs to their closed positions.

Caution!
The cooking hob becomes very hot during operation.
Keep children well out of reach.

LIGHTING THE BURNERS

To ignite the burner, the following instructions are to be followed:

1. Press in the corresponding knob and turn counter-clockwise (fig. 3.2) to the full flame position marked by the symbol (fig. 3.1); hold the knob in until the flame has been lit.
   In the case of a mains failure light the burner with a match or lighted taper.
2. Wait for a few seconds after the gas burner has been lit before letting go of the knob (valve activation delay).
3. Adjust the gas valve to the desired position.

If the burner flame should go out for some reason, the safety valve will automatically stop the gas flow.
To re-light the burner, return the knob to the closed **0 position, wait for at least 1 minute** and then repeat the lighting procedure.

If your local gas supply makes it difficult to light the burner with the knob set to maximum, set the knob to minimum and repeat the operation.

CHOICE OF THE BURNER

On the control panel, near every knob there is a diagram that indicates which burner is controlled by that knob.
The suitable burner must be chosen according to the diameter and the capacity used.
As an indication, the burners and the pots must be used in the following way:

DIAMETERS OF PANS WHICH MAY BE USED ON THE BURNERS		
BURNERS	**MINIMUM**	**MAXIMUM**
Auxiliary	12 cm	14 cm
Semi-rapid	16 cm	24 cm
Rapid	24 cm	26 cm
Triple-ring	26 cm	28 cm
Wok	max 36 cm	
do not use pans with concave or convex bases		

It is important that the diameter of the pot be suitable to the potentiality of the burner so as not to compromise the high output of the burners and therefore energy waste. A small pot on a large burner does not give you a boiling point in a shorter amount of time since the capacity of heat absorption of a liquid mass depends on the volume and the surface of the pot.

DEEP FAT FRYING

For safety purposes when deep fat frying, do not fill the pan more than one third full of oil.
DO NOT cover the pan with a lid and DO NOT leave the pan unattended.
In the unfortunate event of a fire, leave the pan where it is and turn off the control knobs.
Place a damp cloth or lid over the pan to smother the flames. Leave the pan to cool for at least 30minutes before moving the pan.
DO NOT USE WATER ON THE FIRE.

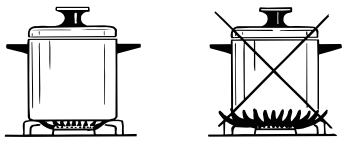

Fig. 3.3

CORRECT USE OF THE TRIPLE-RING BURNER

Only flat bottom pans of the correct size are to be placed on the pan support above the Triple-ring burner.
When using a WOK, the supplied wok stand **must** be placed onto the pan stand to avoid any faulty operation of the triple-ring burner (fig. 3.4a). The wok **should not** be placed directly onto the pan support without the use of the supplied wok stand (fig. 3.4b).

IMPORTANT:

When using the wok stand it MUST ONLY BE PLACED over the pan support for the triple-ring burner (fig.3.4a). **Under no circumstances should the wok stand be placed under the pan supports** (figs 3.5a - 3.5b). Incorrect placement of the wok stand in this manner may impinge the flame resulting in incomplete combustion and give rise to harmful levels of Carbon Monoxide (CO).

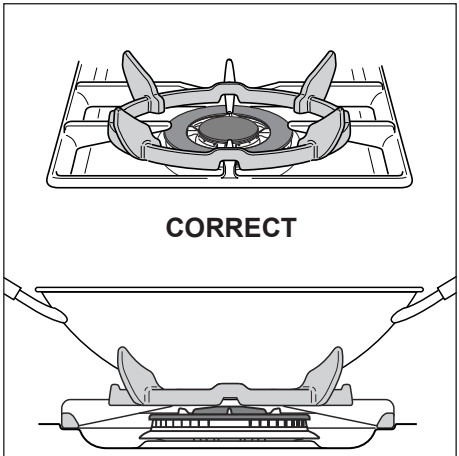

Fig. 3.4a

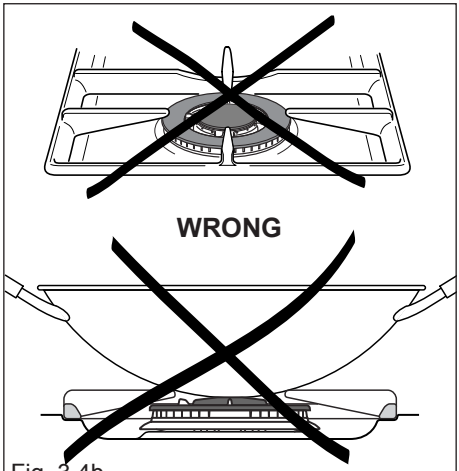

Fig. 3.4b

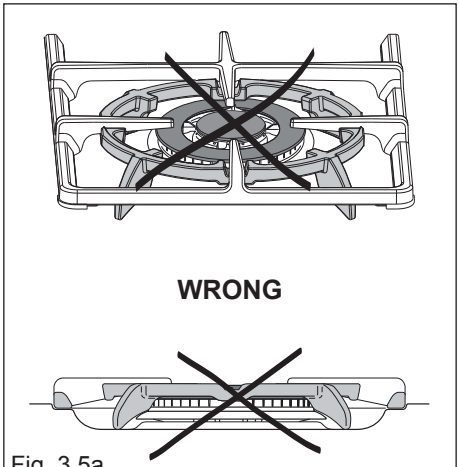

Fig. 3.5a

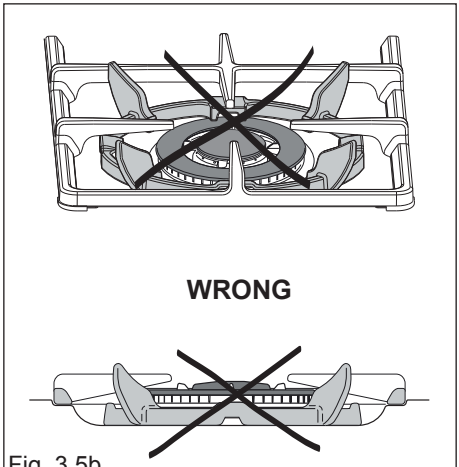

Fig. 3.5b

4 - HOW TO USE THE MULTIFUNCTION BOTTOM MAIN OVEN

Attention: the oven door becomes very hot during operation.
Keep children away.

GENERAL FEATURES

As its name indicates, this is an oven that presents particular features from an operational point of view.
In fact, it is possible to insert 7 different programs to satisfy every cooking need.
The 7 positions, thermostatically controlled, are obtained by 4 heating elements which are:

- Bottom element 1300 W
- Top element 1000 W
- Grill element 2000 W
- Circular element 2200 W

NOTE:

Upon first use, it is advisable to operate the oven for 30 minutes in the position and to eliminate possible traces of grease on the heating elements.
Repeat the operation for another 15 minutes with the grill element on.

Smells and fumes produced during this burn off process are not a cause of alarm. Adequate ventilation should however be provided in the room where the appliance is installed, e.g. by opening a window.

WARNING:
The door is hot, use the handle.

ATTENTION - MOST IMPORTANT
Pay special attention not to touch the hot heating element inside the oven cavity.

OPERATING PRINCIPLES

Heating and cooking in the MULTIFUNCTION oven are obtained in the following ways:

a. **by normal convection**
The heat is produced by the upper and lower heating elements.

b. **by forced convection**
A fan draws in the air contained in the oven, which circulates it through the circular heating element and then forced back into the oven by the fan.
Before the hot air is drawn back again by the fan to repeat the cycle, it envelops the food in the oven, provoking a complete and rapid cooking. It is possible to cook several dishes simultaneously.

c. **by semi-forced convection**
The heat produced by the upper and lower heating elements is distributed throughout the oven by the fan.

d. **by radiation**
The heat is radiated by the infra red grill element.

e. **by radiation and ventilation**
The radiated heat from the infra red grill element is distributed throughout the oven by the fan.

f. **by ventilation**
The food is defrosted by using the fan only function without heat.

Before introducing the food, preheat the oven to the desired temperature.
For a correct preheating operation, it is advisable to remove the tray from the oven and introduce it together with the food, when the oven has reached the desired temperature.
Check the cooking time and turn off the oven 5 minutes before the theoretical time to recuperate the stored heat.

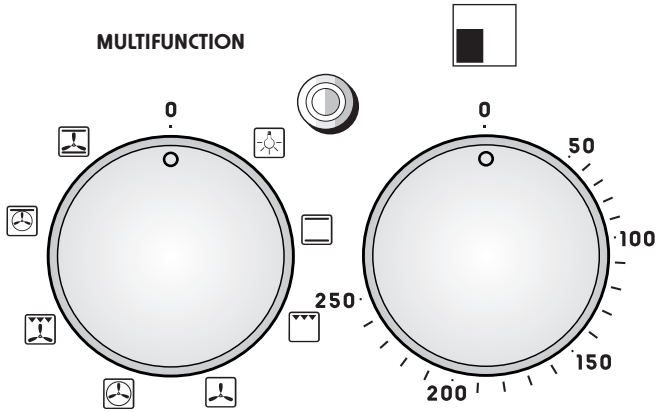

Fig. 4.1 Fig. 4.2

TEMPERATURE KNOB (fig. 4.2)

To turn on the heating elements of the oven, set first the function selector to the required setting and then the thermostat knob to the desired temperature.
To set the temperature, line up the temperature knob indicator with the required temperature.
The elements will turn ON or OFF automatically according to the energy need which is determined by the thermostat.
The operation of the heating elements is signalled by a light placed on the control panel.

FUNCTION SELECTOR KNOB (fig. 4.1)

Rotate the knob clockwise to set the oven for one of the following functions:

OVEN LIGHT

By setting the knob to this position, only the oven light comes on.
The light remains on whilst any of the cooking modes are selected.

TRADITIONAL CONVECTION COOKING

The upper and lower heating elements are switched on. The heat is diffused by natural convection and the temperature must be regulated between 50°C and 250°C with the thermostat knob.
It is necessary to preheat the oven before introducing the foods to be cooked.

Recommended for:
For foods which require the same cooking temperature both internally and externally, i. e. roasts, spare ribs, meringue, etc.

NB DO NOT place food, trays or silver foil directly onto the base of the oven as this may damage the enamel coating of the oven.

GRILLING

The infra-red heating element is switched on. The heat is diffused by radiation.
Use with the **oven door closed** and the thermostat knob must be regulated **between 50°C and 225°C maximum**.
Preheat the oven for about 5 minutes.
Introduce the food to be cooked, positioning the rack as close to the grill as possible.
The dripping pan should be placed under the rack to catch the cooking juices and fats.

Use with the oven door closed.
Note: It is recommended that you do not grill for longer than 30 minutes at any one time.
Attention: The oven door becomes very hot during operation. Keep children away.

Recommended for:
Intense grilling action for browning, crisping, “au gratin”, toasting, etc.

DEFROSTING FROZEN FOODS

Only the oven fan is on. To be used with the thermostat knob on “**0**” because the other positions have no effect. The defrosting is done by simple ventilation without heat.

Recommended for:
To defrost frozen foods.
The defrosting times vary according to the quantity and type of foods to be defrosted.

HOT AIR COOKING

The circular element and the fan are on. The heat is diffused by forced convection and the temperature must be regulated between 50°C and 250 °C with the thermostat knob.
It is not necessary to preheat the oven.
Cooking temperature may be reduced for fan assisted ovens, see “OVEN TEMPERATURE GUIDE”.

Recommended for:
For foods that must be well done on the outside and tender or rare on the inside, i. e. lasagna, lamb, roast beef, whole fish, etc.

VENTILATED GRILL COOKING

The infra-red ray grill and the fan are on. The heat is mainly diffused by radiation and the fan then distributes it throughout the oven. The temperature can be regulated via the thermostat knob to **between 50 °C and 200 °C maximum**.
It is necessary to preheat the oven for about 5 minutes.

Use with the oven door closed.
Note: It is recommended that you do not grill for longer than 30 minutes at any one time.
Attention: The oven door becomes very hot during operation. Keep children away.

Recommended for:
For grill cooking when a fast outside browning is necessary to keep the juices in, i. e. veal steak, steak, hamburger, etc.

SLOW HEATING AND KEEPING FOOD WARM

The upper element and the circular element connected in series, are switched on; also the fan is on. The heat is diffused by forced convection with the most heat being produced by the upper element.
The temperature must be regulated between 50°C and 140°C with the thermostat knob.

Recommended for:
To keep foods hot after cooking. To slowly heat already cooked foods.

CONVECTION COOKING WITH VENTILATION

The upper and lower heating elements and the fan turn on.
The heat coming from the top and bottom is diffused by forced convection.
The temperature must be regulated between 50°C and 250°C with the thermostat knob.

Recommended for:
For foods of large volume and quantity which require the same internal and external degree of cooking; for ie: rolled roasts, turkey legs, joints of meat, cakes, etc.

NB DO NOT place food, trays or silver foil directly onto the base of the oven as this may damage the enamel coating of the oven.

5 - HOW TO USE THE TOP SMALL GRILL

Attention: The oven door becomes very hot during operation.
Keep children away.

SWITCH AND TEMPERATURE SELECTOR

Turn the selector knob (fig. 5.1) to the required function.

0 OFF - as per fig. 5.1

The oven light is switched on. The indicator light close to the control knob is alight.

MIN-MAX The oven light is switched on. The electric grill is controlled by a thermostat which allow to maintain the temperature constant.
The control of the temperature is assured by a thermostatic probe positioned inside the oven.
The probe must be always kept in its housing, in a clean condition, as an incorrect position or encrustment may cause an alteration in the control of the temperature.
To switch on the grill turn the control knob clockwise and set the knob to the required temperature between MIN and MAX.
The oven door may be opened briefly to check the cooking; however it must must be closed immediately to proceed with the grilling.

WARNING:
The door is hot, use the handle.

During use the appliance becomes hot. Care should be taken to avoid touching heating elements inside the oven.

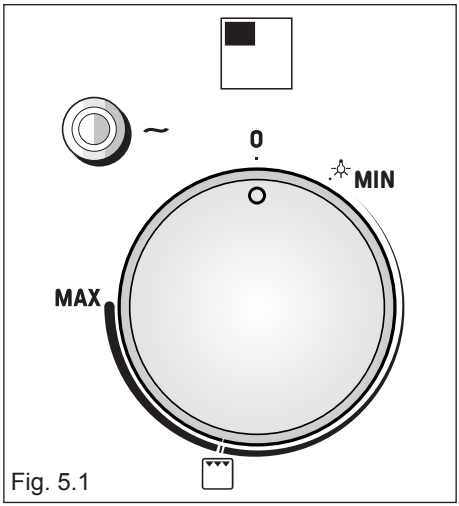

Fig. 5.1

USE OF THE GRILL

With the oven door closed, preheat the oven at MAX setting for about 2 minutes.
For a correct preheating it is advisable to remove the shelves from the oven and reintroduce then, with the food, when the oven has reached the desired temperature.

Introduce the food to be cooked, position the rack in the most suitable position for the type of food being cooked (for the best result, we suggest the bottom 2 levels).
After the preheating time, set the knob to position (do not use on higher settings.
The drip pan should be placed under the rack to catch the cooking juices and fats.

Grill with the oven door closed.

Do not grill for longer than 30 minutes at any one time (Grilling for longer than the reccomended time may mean the appliance overheats).

Caution: the oven door becomes very hot during operation. Keep children well out of reach.

6 - HOW TO USE THE TALL OVEN

Attention: The oven door becomes very hot during operation.
Keep children away.

SWITCH AND TEMPERATURE SELECTOR

Turn the selector knob (fig. 6.1) to the required function.

0 OFF - as per fig. 6.1

The oven light is switched on. The fan operates without the heating element, this function can be used for defrosting. The indicator light close to the control knob is alight.

To keep hot cooked food at serving temperature.

50-MAX The oven light is switched on. The oven temperature can be set between 50°C - MAX. Several different meals may be cooked simultaneously on various shelves, as the heated air circulates evenly throughout the oven. The hot air system cooks more quickly than conventional static system, therefore the temperature should be set 10°C - 20°C below the values recommended in your recipe books. The oven door may be opened briefly while cooking to check on the food, as any heat losses are quickly recovered when the door is closed.

WARNING:
The door is hot, use the handle.

During use the appliance becomes hot. Care should be taken to avoid touching heating elements inside the oven.

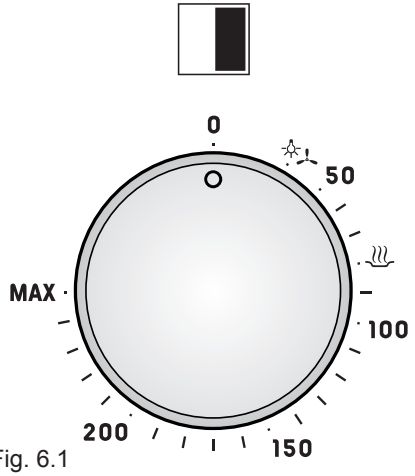

Fig. 6.1

COOKING WITH FORCED AIR

Preheat the oven at the desired temperature, the set value is reached when the temperature indicator light goes off.

For a correct preheating it is advisable to remove the shelves from the oven and reintroduce then, with the food, when the oven has reached the desired temperature.

We suggest not to use more than three shelves at the same time, For best cooking results, the top and bottom shelves should not be used.

Fan cooking is more economical and quicker than cooking in a conventional oven.
The moving hot air surrounds the food and penetrates it more quickly than in a conventional oven.
Cooking yeast based dishes is also speeded up this way. If the oven door has been opened, the oven quickly regains its temperature once the door is closed.

7 - OVEN TEMPERATURE GUIDE

Cooking process	Oven heat	Gas mark	Electric oven temperature	
			°C	°F
Keeping food hot, milk puddings	very cool	½	120	250
Egg custards	cool	1	140	275
Rich fruit cakes, braising	cool	2	150	300
Low temperature roasting, shortbread	moderate	3	160	325
Victoria sandwich, plain fruit cake, baked fish	moderate	4	180	350
Small cakes, choux pastry	fairly hot	5	190	375
Short pastry, Swiss rolls, soufflés	fairly hot	6	200	400
High temperature roasting, flaky pastry, scones	hot	7	220	425
Puff pastry, bread	very hot	8	230	450
Small puff pastries, browning cooked foods	very hot	9	240	475

These temperatures relate to the centre oven temperature.

Remember to use ovenproof dishes and to adjust the oven temperature during cooking if necessary.

NOTE: Reduce the oven temperature by 10 – 20°C for fan assisted ovens.
For dishes that take over an hour to cook, reduce the cooking time by 10 minutes per hour.

8 - ELECTRONIC PROGRAMMER (BOTTOM MAIN OVEN ONLY)

The electronic programmer is a device which groups together the following functions:

- 24 hours clock with illuminated display
- Timer (up to 23 hours and 59 minutes)
- Program for automatic oven cooking (bottom main oven only)
- Program for semi-automatic oven cooking (bottom main oven only)

Description of the buttons:

Timer

Cooking time

End of cooking time

Simultaneously: Switching to manual and program reset.

To increase the numbers on the digital display

To decrease the numbers on the digital display.

Description of the illuminated symbols:

A flashing - Programmer in automatic position but not programmed

A illuminated - Programmer in automatic position with program inserted.

Automatic cooking taking place

Timer in operation

and **A** - flashing - Program error. (The time of day lies between the calculated cooking start and end time).

Note:
Select a function by the respective button and, in 5 seconds, set the required time with the ⋀ / ⋁ buttons ("one-hand" operation).
After a power cut the display resets to zero and cancels the set programs.

Fig. 8.1

Caution: If the electricity supply is cut off (the display numbers will flash), the clock will reset and all the programs entered will be cancelled.

SETTING TIME OF DAY (fig. 8.2)

The programmer is provided with an electronic clock with luminous figures showing the hour and minutes.
The first time the oven is connected up to the electricity supply and after a power cut, three zeroes will flash on the programmer display.
To adjust the time, the two buttons must be pressed simultaneously and then the button or until the correct time is set.
Setting speed automatically increases if you keep the setting buttons pressed.

MANUAL OPERATION

To use the oven manually, i.e. without the programmer, you must cancel the flashing **A** by pressing the two buttons simultaneously (the letter **A** will go out and the symbol will come on).

CANCELLING A PROGRAMME

If the letter **A** is not flashing (which means that a cooking program has already been set) by pressing the two buttons simultaneously you will cancel the program and switch to manual.

If the oven is on, you must switch it off manually.

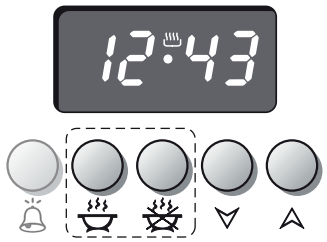

Fig. 8.2

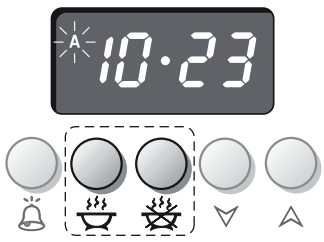

Fig. 8.3

MINUTE MINDER

The minute counter function consists simply of an acoustic signal which can be set for a maximum of 23 hours 59 minutes.

If the letter **A** is flashing, press the two buttons simultaneously.

To set the time, press button and then button or until the required time appears on the display (fig. 8.4).

The symbol will come on.

Countdown will begin immediately and can be seen on the display at any time by simply pressing button .

When the time expires, the symbol will go out and an intermittent acoustic signal will come on which can be switched off by pressing any of the buttons.

AUDIBLE SIGNAL

The audible signal sounds at the end of a minute minder cycle or of a cooking programme for a period of 7 minute.
The signal can be cancelled by pressing any function button.
Pressing the button without having previously selected a function the frequency of the signal change. You can choose from three variations.
The selected signal is audible as long as the button is pressed.

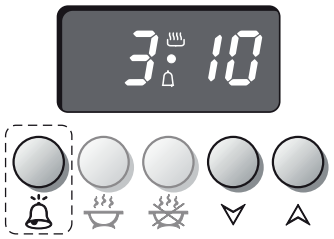

Fig. 8.4

Fig. 8.5

SEMI - AUTOMATIC COOKING

This automatically switches the oven off after the required cooking time. There are two methods of semi-automatic cooking:

1° METHOD: Programming the cooking time (fig. 8.6)

- Set the cooking time by pressing button and then button ⩓ to move forward or ⩔ to move back if you have gone beyond the required time.

The letter **A** and the symbol will appear.

2° METHOD: Programming the end of cooking time (fig. 8.7)

- Set the end of cooking time by pressing button and then button ⩓ to move forward or ⩔ to move back if you have gone beyond the required time.

The letter **A** and the symbol will appear.

Having programmed according to one of the above methods, set the temperature and function via the function selector and thermostat knob (see specific chapters).

The oven will come on immediately and when the set time or programmed end of cooking time expires, it will automatically switch off.

During cooking the letter **A** and the symbol remains on; press button to display the remaining time until end of cooking or press button to display the end of cooking time.

The cooking program can be cancelled at any time by pressing the two buttons simultaneously.

At the end of cooking, turn the oven knob to the off position the symbol will go out. The letter **A** will flash and the acoustic signal will come on - this can be switched off by pressing any of the buttons.

Reset the function selector and thermostat knob and set the programmer to manual by pressing the two buttons simultaneously.

Important: Also if oven is turned off automatically by the programmer, remember to turn to the off position the function selector and the thermostat knob. If not, when pressing two buttons simultaneously for manual use, the oven will start to operate.

Remember to press the two buttons simultaneously to be able to use the oven in manual setting.

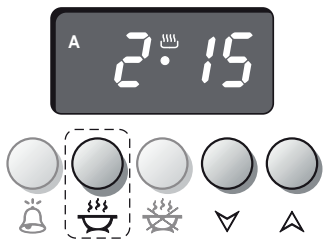

Fig. 8.6

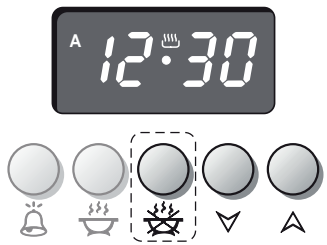

Fig. 8.7

AUTOMATIC COOKING

To cook in the oven in automatic mode follow the instructions below:

1. Set the cooking time
2. Set the end of cooking time
3. Set the cooking temperature and function

These operations are carried out as follows:

1. Set the cooking time by pressing button and then ⩓ to move forward or ⩔ to move back if you have gone beyond the required time (fig. 8.8).
   The letter **A** and the symbol appear.
2. Press button ; the cooking time already added to the clock time appear.
   Set the end of cooking time by pressing button ⩓ if you go beyond the required time, you can go back by pressing button ⩔.
   The symbol go out and the letter **A** remains on (fig. 8.9).
   If during the setting the letter **A** begins to flash on the display and the acoustic signal comes on, this indicates a programming error, i.e. the cooking cycle has been superimposed on the clock time. In this case alter the end of cooking time or the cooking time as above.
3. Set the cooking temperature and function via the function selector and thermostat knob (see specific chapters).
   The oven is now programmed and everything will work automatically; the oven will come on as required and finish cooking at the programmed time.

At the start of the cooking the symbol appear.
During cooking the letter **A** and the symbol remains on; press button to display the remaining time until end of cooking or press button to display the end of cooking time.
The cooking program can be cancelled at any time by pressing the two buttons simultaneously.
At the end of cooking, the oven switch off, the symbol go out, the letter **A** flash and the acoustic signal come on - this can be switched off by pressing any of the buttons.
Reset the function selector and thermostat knob and set the programmer to manual by pressing the two buttons simultaneously.

Important: Also if oven is turned off automatically by the programmer, remember to turn to the off position the function selector and the thermostat knob. If not, when pressing two buttons simultaneously for manual use, the oven will start to operate.

Remember to press the two buttons simultaneously to be able to use the oven in manual setting.

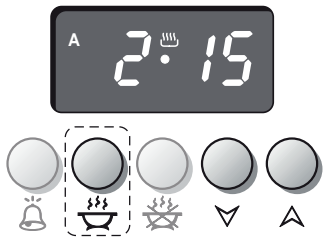

Fig. 8.8

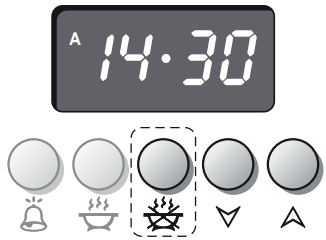

Fig. 8.9

IMPORTANT – MAIN OVEN NOT WORKING

If the main Oven is not working, it may have been accidently set to “AUTOMATIC” or the power to the appliance was interrupted. If the Timer is showing the letter “**A**” as below or the time of day is flashing, the Oven may not turn on or be delayed in its operation.

Before requesting a service call, please refer to the timer set up instructions in this handbook and ensure the timer is set to “MANUAL” operation ensuring the cook symbol appears in the timer as shown below.

NB. A service charge will be made if an engineer is called out to re-set the timer, as this is not covered by the guarantee.

9 - CLEANING AND MAINTENANCE

GENERAL ADVICE

- **Before you begin cleaning, you must ensure that the appliance is switched off at the cooker switch.**
- The periodical lubrication of the gas taps must be done only by specialized personnel.
- If a tap becomes stiff, do not force; contact your local After Sales Service Centre.
- It is advisable to clean when the appliance is cold and especially when cleaning the enamelled parts.
- Avoid leaving alkaline or acidic substances (lemon juice, vinegar, etc.) on the surfaces.
- **Avoid using cleaning products with a chlorine or acidic base.**
- **Important: The use of suitable protective clothing/gloves is recommended when handling or cleaning this appliance.**
- **Under no circumstances should any external covers be removed for servicing or maintenance except by suitable qualified personnel.**

WARNING:
When correctly installed, your product meets all safety requirements laid down for this type of product category.
However special care should be taken around the rear or the underneath of the appliance as these areas are not designed or intended to be touched and may contain sharp or rough edges, that may cause injury.

CLEANING

- **Stainless steel hob:** Spillage on the hob can usually be removed by a damp soapy cloth. More obstinate stains can be removed by using a proprietary stainless steel cleaning product that does not contain chlorine or acidic base.
- **Control panel facia:** Clean very carefully with water and neutral soap; the cloth used must be rinsed well and must be free of any cleaning chemicals to avoid damaging any screen print on the facia.
- **Door, glass & painted surfaces:** Clean very carefully with water and neutral soap; the cloth used must be rinsed well and must be free of any cleaning chemicals.
- **Pan stands & burner caps:** Clean with a sponge and soapy water or proprietary cream cleaner. Alway dry throughly. DO NOT PUT IN THE DISHWASHER.
- **Burner bodies (aluminium alloy):** They should be cleaned with soapy water and a clean cloth. For stubborn stains a proprietary cream or stainless steel cleaner may be used; however to maintain an uniform finish we would recommend the whole area is cleaned. NOTE: Please ensure the slots/castlellations are kept free of any material/cleaner.

Attention!

The appliance gets very hot, mainly around the cooking areas. It is very important that children are not left alone in the kitchen when you are cooking.

Do not use a steam cleaner because the moisture can get into the appliance therefore making it unsafe.

Do not use harsh abrasive cleaners or sharp metal scrapers to clean the oven door glass since they can scratch the surface, which may result in shattering of the glass.

- **Inside of oven:** The oven should always be cleaned after use when it has cooled down. The cavity should be cleaned using a mild detergent solution and warm water. Suitable proprietary chemical cleaners may be used only on enamel after first consulting the instructions supplied with the oven cleaner and testing a small sample on the oven cavity. Abrasive cleaning agents or scouring pads/cloths should not be used on the cavity surface.

  NOTE: The manufacturers of this appliance will accept no responsibility for damage caused by chemical or abrasive cleaning.

  Let the oven cool down and pay special attention not to touch the hot heating elements inside the oven cavity.

CORRECT REPLACEMENT OF THE AUXILIARY, SEMI-RAPID AND RAPID BURNERS

It is very important to check that the burner flame distributor "**F**" and the cap "**C**" have been correctly positioned (see figs. 9.1, 9.2) - failure to do so can cause serious problems with correct combustion and may cause irreversible damage to the hob surface.

CORRECT REPLACEMENT OF THE TRIPLE RING BURNER

The triple ring burner must be correctly positioned (see fig. 9.5); the burner rib must be enter in their logement as shown by the arrow (see fig. 9.3).
Then position the cap "**A**" and the ring "**B**" (figs. 9.4, 9.5).
The burner correctly positioned must not rotate (fig. 9.4).

BURNERS AND PAN SUPPORTS

These parts can be removed and cleaned as indicated previously.
After cleaning, the burners and their flame spreaders must be well dried and correctly replaced.
It is very important to check that the burner flame spreader and the cap have been correctly positioned. Failure to do so can cause serious problems with correct combustion and may cause irreversible damage to the hob surface.
Check that the electrode "**S**" (figs. 9.1, 9.3) next to each burner is always clean to ensure trouble-free sparking.
Check that the probe "**T**" (figs. 9.1, 9.3) next to each burner is always clean to ensure correct operation of the safety valves.

Both the probe and ignition plug must be very carefully cleaned.

Note: To avoid damage to the electric ignition do not use it when the burners are not in place.

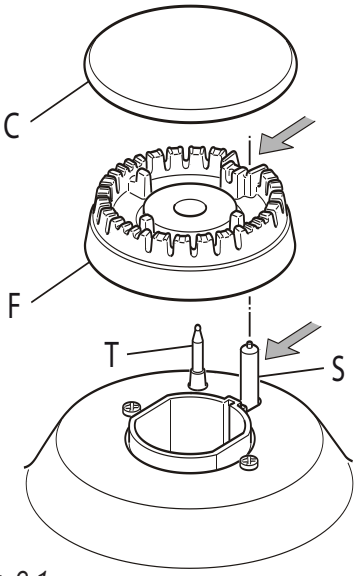

Fig. 9.1

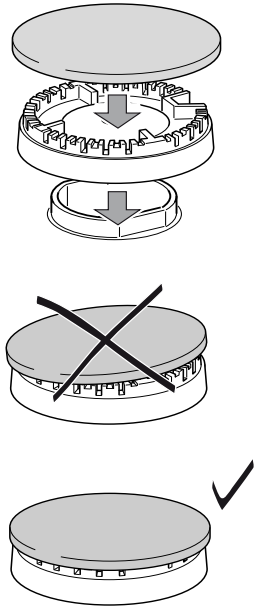
Fig. 9.2

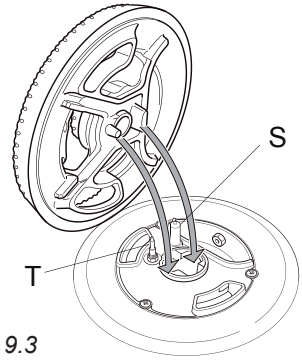

Fig. 9.3

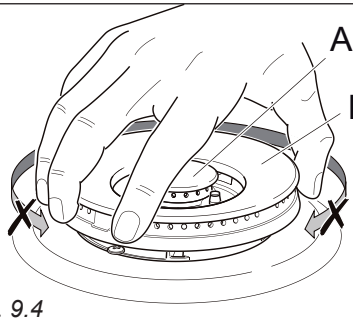

Fig. 9.4

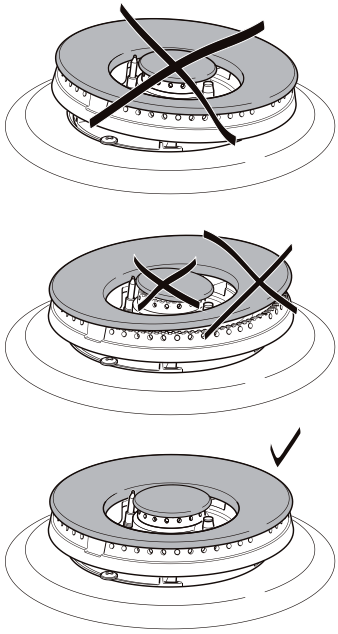
Fig. 9.5

WIRE RACKS

- Assemble the wire racks to the oven walls using the screws (2 screws figs. 9.6a, 9.6b; 4 screws fig. 9.6c).
- Slide in, on the guides, the shelf (figs. 9.7a, 9.7b).
  The shelf must be fitted so that the safety notch, which stops it sliding out, faces the inside of the oven; the guard rail shall be at the back.
- Left ovens only: slide in, on the guides, the tray (figs. 9.7a, 9.7b).
- To dismantle, operate in reverse order.

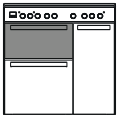

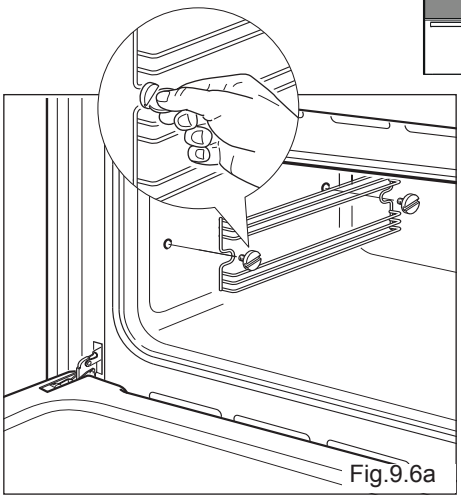

Fig.9.6a

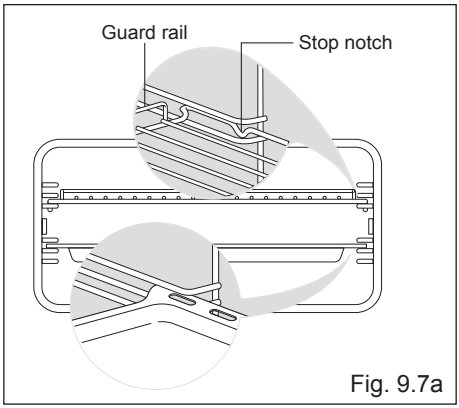

Fig. 9.7a

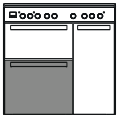

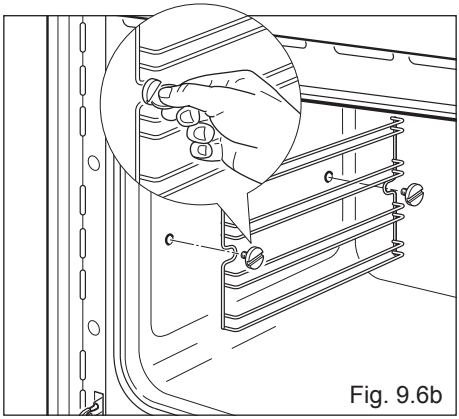

Fig. 9.6b

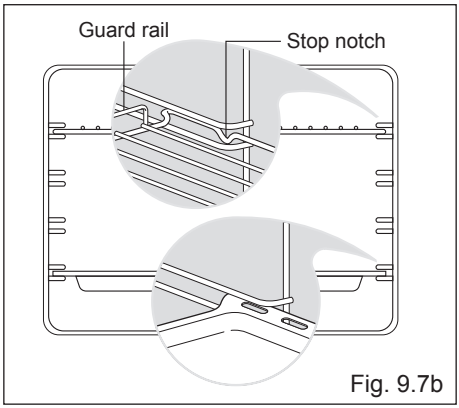

Fig. 9.7b

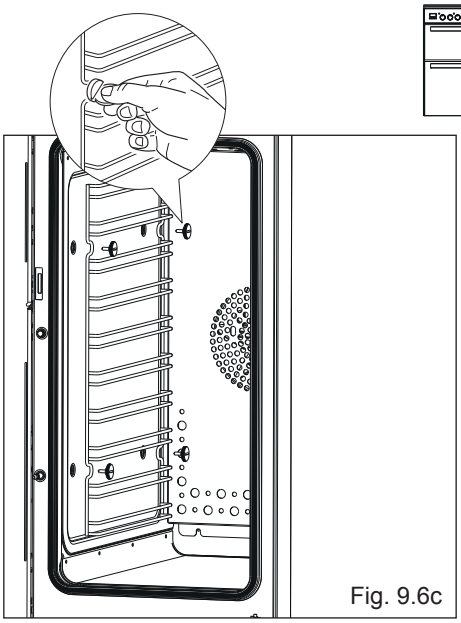

Fig. 9.6c

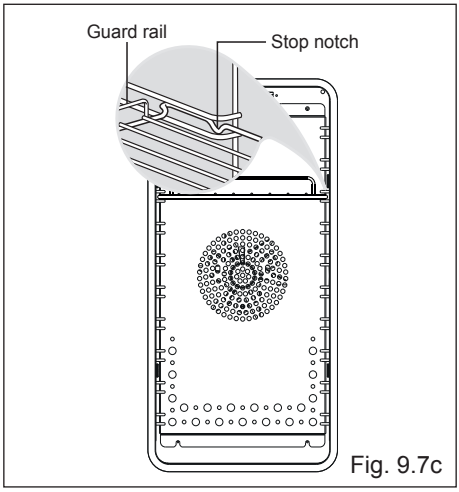

Fig. 9.7c

REPLACING THE OVEN LAMP

WARNING: Ensure the appliance is switched off and disconnected from the electrical power supply before replacing the lamp to avoid the possibility of electric shock.

- Let the oven cavity and the heating elements to cool down.
- Switch off the electrical supply.
- Remove the protective cover "**A**" (fig. 9.8).
- Replace the halogen lamp "**C**" with a new one suitable for high temperatures (300°C) having the following specifications: 220-240V, 50/60Hz and same power (check watt power as stamped in the lamp itself) of the replaced lamp.

  IMPORTANT WARNING: Never replace the bulb with bare hands; contamination from your fingers can cause premature failure. Always use a clean cloth or gloves.
- Refit the protective cover.

Note: Oven lamp replacement is not covered by your guarantee.

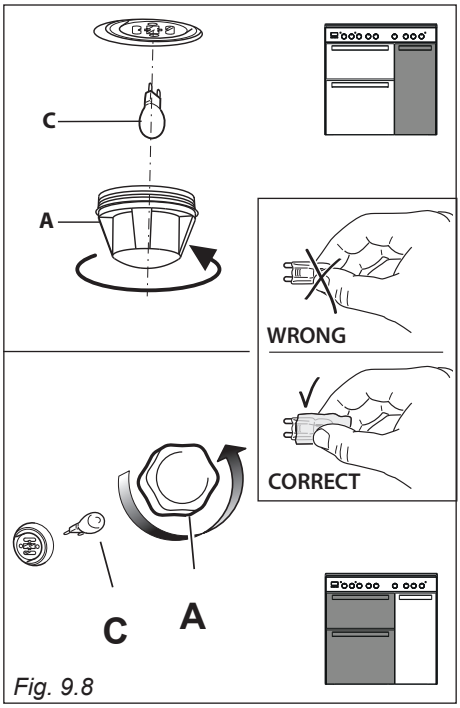

Fig. 9.8

TELESCOPIC SLIDING SHELF SUPPORTS

The telescopic sliding shelf supports make it safer and easier to insert and remove the oven shelf and tray. They stop when they are pulled out to the maximum position.

Important! When fitting the sliding shelf supports, make sure that you fit:

- The slides to the top wire of a rack. They do not fit on the lower wire.
- The slides so that they run out towards the oven door.
- Both sides of each pair of shelf slides.
- Both sides on the same level.

To fix the sliding shelf support onto the side racks:

- Screw the side racks onto the oven walls (figs. 9.6a, 9.6b, 9.6c).
- Fit the sliding shelf support onto the top wire of a rack and press (fig. 9.9). You will hear a click as the safety locks clip over the wire.

To remove the telescopic sliding shelf supports:

- Remove the side racks by unscrewing the fixing screws (fig. 9.10).
- Lay down the telescopic sliding shelf support and side racks, with the telescopic sliding shelf support underneath.
- Find the safety locks. These are the tabs that clip over the wire of the side rack (arrow 1 in fig. 9.11).
- Pull the safety locks away from the wire to release the wire (arrow 2 in fig. 9.11).

Cleaning the sliding shelf supports:

- Wipe the supports with a damp cloth and a mild detergent only.
- Do not wash them in the dishwasher, immerse in soapy water, or use oven cleaner on them.

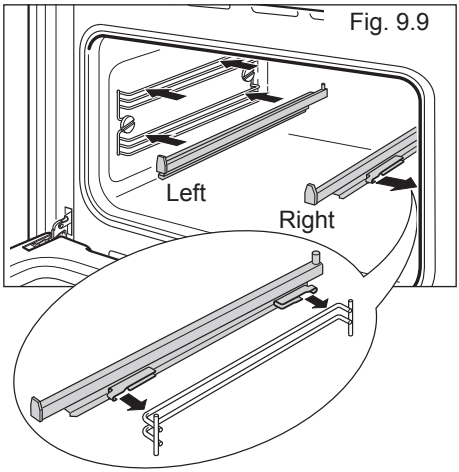

Fig. 9.9

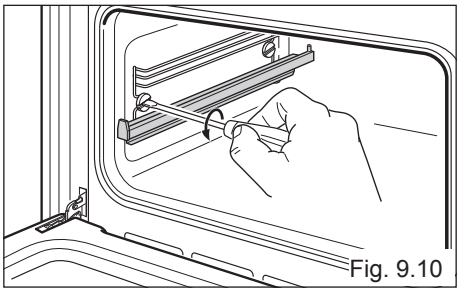
Fig. 9.10

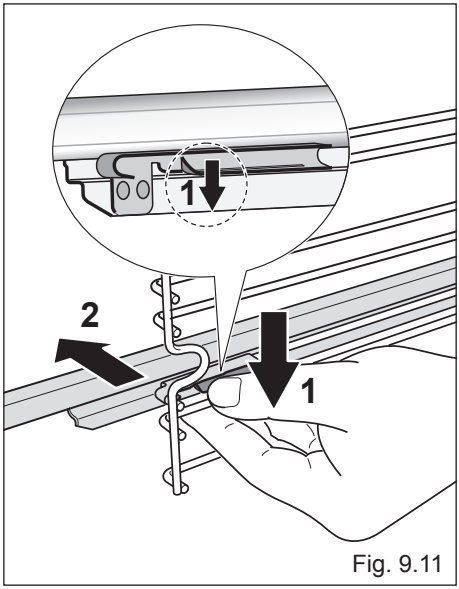

Fig. 9.11

TOP LEFT OVEN DOOR

REMOVING THE OVEN DOOR

The oven door can easily be removed as follows:

- Open the door to the full extent (fig. 9.12a).
- Open the lever "**A**" completely on the left and right hinges (fig. 9.12b).
- Hold the door as shown in fig. 9.12d.
- Gently close the door (until left and right hinge levers "**A**" are hooked to part "**B**" of the door (figs. 9.12b, 9.12c).
- Withdraw the hinge hooks from their location following arrow "**C**" (fig. 9.12e).
- Rest the door on a soft surface.

LOWER LEFT OVEN DOOR AND RIGHT TALL OVEN

Note: The oven door should only be removed by an authorised service agent. Removal of the oven door by a nonauthorised person will invalidate the guarantee.

Important!

Always keep a safe distance from the door hinges, paying special attention to the position of your hands.

If the door hinges are not correctly hooked, they could unhook and close suddenly and unexpectedly with risk of injury.

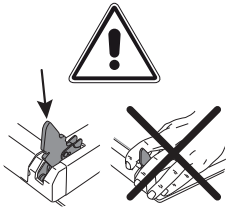

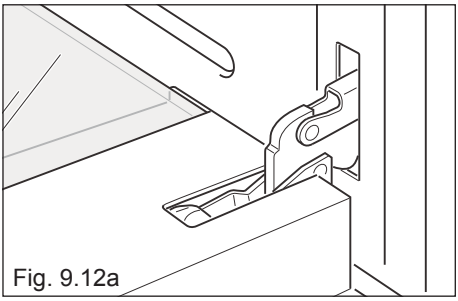

Fig. 9.12a

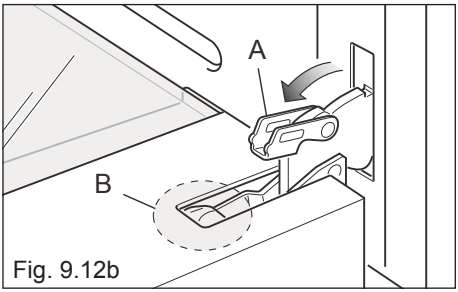

Fig. 9.12b

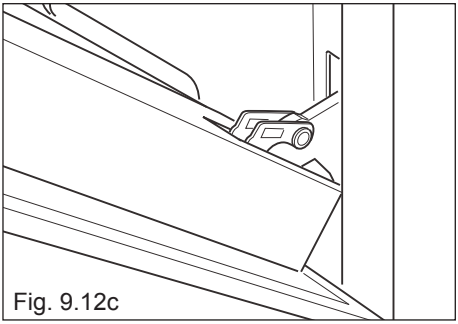

Fig. 9.12c

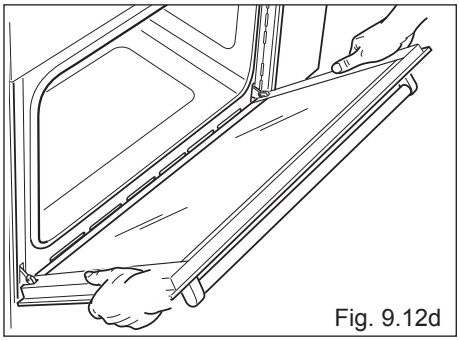

Fig. 9.12d

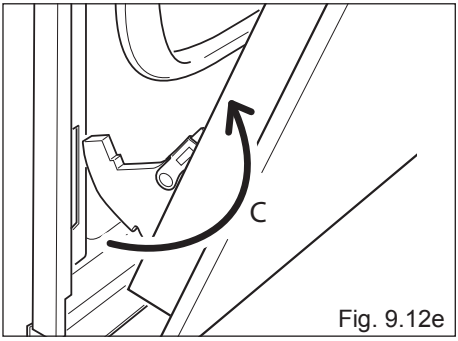

Fig. 9.12e

TOP LEFT OVEN DOOR REFITTING THE OVEN DOOR

1. Hold the door firmly (fig. 9.13a).
2. Insert the hinge tongues into the slots, making sure that the groove drops into place as shown in the figure 9.13b.
3. Open the door to its full extent.
4. Fully close the levers “**A**” on the left and right hinges, as shown in the figure 9.13c.
5. Close the door and check that it is properly in place.

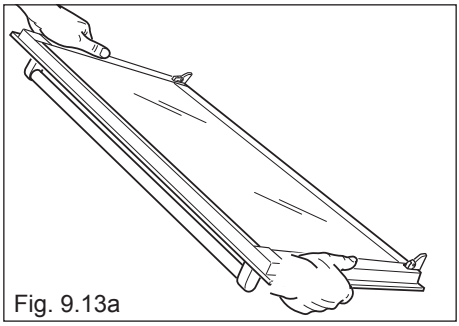

Fig. 9.13a

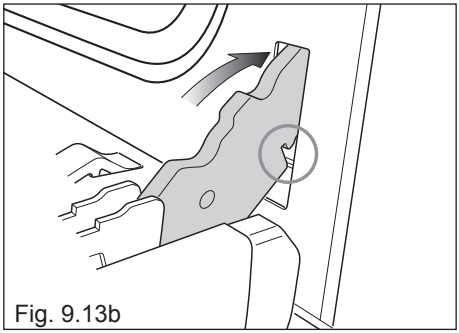

Fig. 9.13b

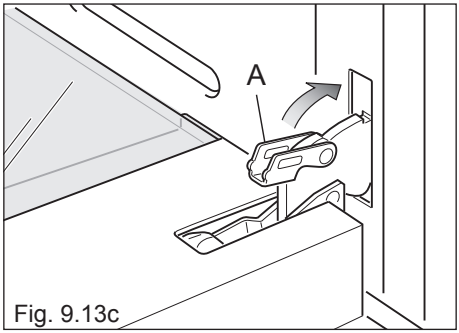

Fig. 9.13c

REMOVING AND REPLACING THE INNER DOOR GLASS PANE FOR CLEANING

If you wish to clean the inner glass of the door, make sure you follow the precautions and instructions very carefully.
Replacing the glass pane and the door incorrectly may result in damage to the appliance and may void your warranty.

IMPORTANT!

- Make sure the appliance and all its parts have cooled down. Do not attempt to handle the parts of a hot appliance.
- Take extreme care when handling the glass pane. Avoid the edges of the glass bumping against any surface. This may result in the glass shattering.
- **CAUTION:** Do not use harsh abrasive cleaners or sharp metal scrapers to clean the oven door glass since they can scratch the surface, which may result in shattering of the glass.
- If you notice any sign of damage on any of the glass panes (such as chipping, or cracks), do not use the oven. Call your Authorised Service Centre or Customer Care.
- Make sure you replace the glass pane correctly. Do not use the oven without glass pane correctly in place.
- If the glass pane feels difficult to remove or replace, do not force it. Call your Authorised Repairer or Customer Care for help.
  Note: Service visits providing assistance with using or maintaining the appliance are not covered by your warranty.

TOP LEFT OVEN DOOR CLEANING THE PANES OF GLASS

The oven door is fitted with no. 2 panes:

- no. 1 outside;
- no. 1 inner.

To clean the panes on both sides it is necessary to remove the inner pane as follows.

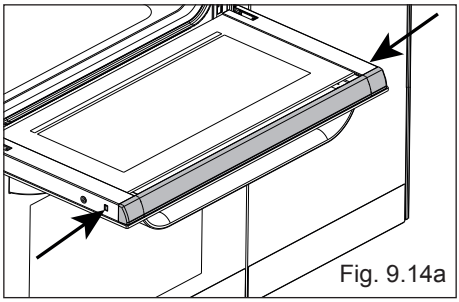

Fig. 9.14a

REMOVING THE INNER PANE OF GLASS

1. **Lock the door open:**

- Open the door to the full extent (fig. 9.12a).
- Open the lever "**A**" completely on the left and right hinges (fig. 9.12b).
- Hold the door as shown in fig. 9.12d.
- Gently close the door until left and right hinge levers "**A**" are hooked to part "**B**" of the door (figs. 9.12b, 9.12c).

2. **Remove the inner pane:**

- Press the tabs on the sides of the glass retainer which is positioned at the top of the oven door (arrows in fig. 9.14a), then gently remove the retainer (arrow 1 in fig. 9.14b).
- Gently pull out the inner pane of glass (arrow 2 in fig. 9.14b).

  IMPORTANT: It is advisable, while removing the glass, to keep pressed in position the four rubber pads "**D**" (fig. 9.15a), by a finger, to avoid breakage or slippage of the rubber pads themselves.
- Clean the glass with an appropriate cleaner. Dry thoroughly, and place on a soft surface.

Now you can also clean the inside of the outer glass.

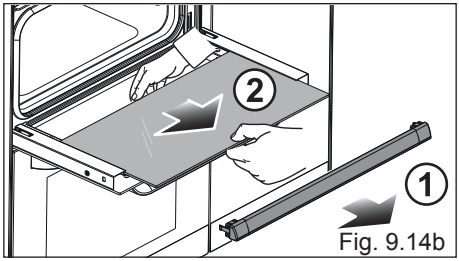

Fig. 9.14b

AFTER CLEANING, REPLACE THE INNER GLASS PANE

When replacing the inner glass pane, make sure that:

- You replace the pane correctly, as shown. The pane must be in the position described below in order to fit into the door and to ensure that the oven operates safely and correctly.

To reassemble the inner pane of the oven door operate as follows:

1. Make sure the door is locked open (see fig. 9.12c).
2. Replace the inner pane:

- Check that the four rubber pads are in place ("**D**" in fig. 9.15a).
  IMPORTANT: It is advisable, while refitting the glass, to keep pressed in position the four rubber pads "**D**", by a finger, to avoid breakage or slippage of the rubber pads themselves (fig. 9.15b).
- Check that you are holding the pane the correct way. You should be able to read the wording on it as it faces you.
- Insert the pane in the left "**E**" and right "**F**" slide guides (fig. 9.15b), and gently slide it to the retainers "**H**" (fig. 9.15c).
- Gently push the glass retainer back into place. You should be able to hear the tabs on both sides click as they lock the glass retainer in (fig. 9.15d).
- Unlock the oven door by opening it completely and closing the lever "**A**" on the left and right hinges (fig. 9.15e).

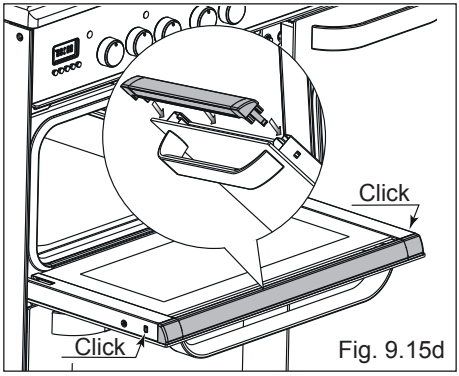

Fig. 9.15d

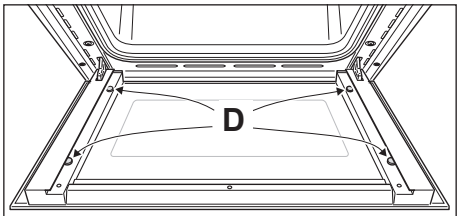

Fig. 9.15a

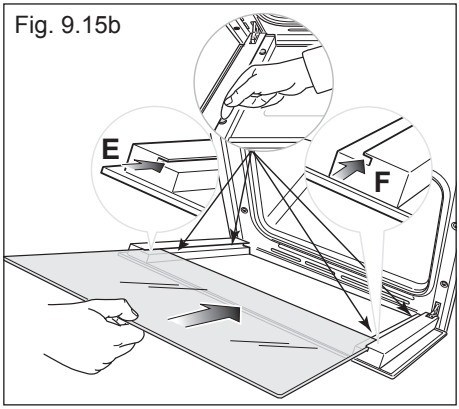

Fig. 9.15b

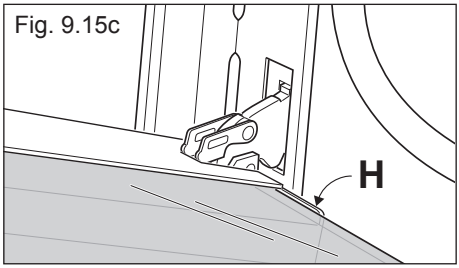

Fig. 9.15c

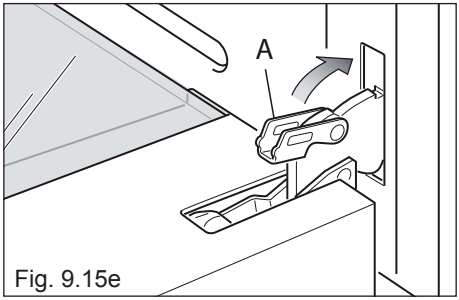

Fig. 9.15e

LOWER LEFT OVEN DOOR

Note: The oven door should only be removed by an authorised service agent.
Removal of the oven door by a nonauthorised person will invalidate the guarantee.

REMOVING THE INNER PANE OF GLASS
IMPORTANT WARNING: BEFORE REMOVING THE INNER GLASS OF THIS DOOR IS IT IS MANDATORY THAT THE TOP SMALL GRILL DOOR IS REMOVED.

When removing and replacing the inner glass, the door should be held still by one person (fig. 9.16a). A second person should gently remove the glass (fig. 9.16b).

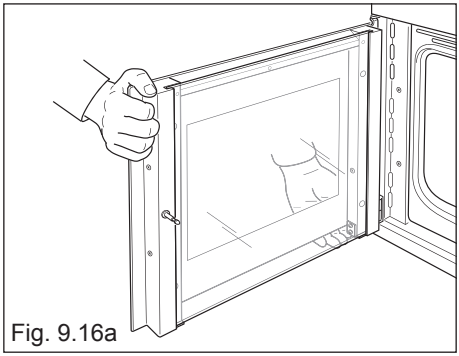
Fig. 9.16a

To clean the inner pane of the oven door on both sides operate as follows:

- Open the oven door.
- Gently pull out the inner pane of glass (fig. 9.16b). Forcible removal of the door glass may lead to damage of the door hinges.
- Clean the glass with an appropriate cleaner. Dry thoroughly, and place on a soft surface.
- Now you can also clean the inside of the outer glass.

Do not use harsh abrasive cleaners or sharp metal scrapers to clean the oven door glass since they scratch the surface, which may result in shattering of the glass.

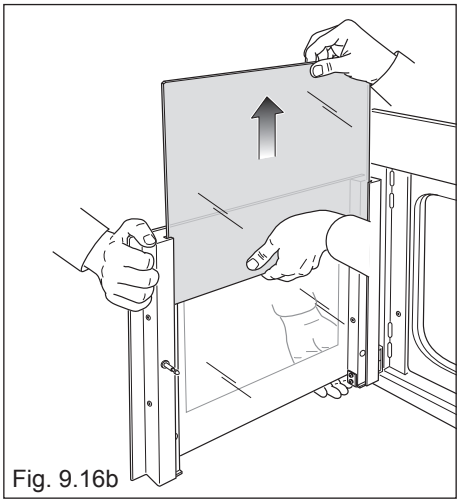
Fig. 9.16b

REPLACING THE INNER PANE OF GLASS

To replace the inner pane of the door operate as follows:

- Check that the four rubber pads are in place ("**D**" in fig. 9.17a).
- Check that you are holding the pane the correct way. You should be able to read the wording on it as it faces you.
- Whilst one person holds the door still, a second person should insert the inner pane in the left "**E**" and right "**F**" side guides (fig. 9.17b) and gently let it slide up to the retainers "**H**" (fig. 9.17c). Forcible replacement of the door glass may lead to damage of the door hinges.

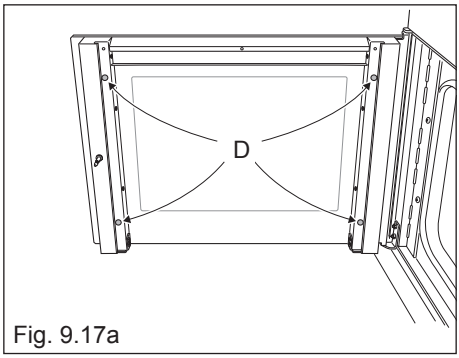

Fig. 9.17a

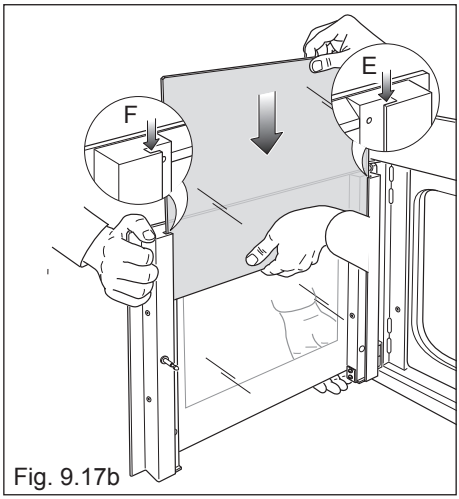

Fig. 9.17b

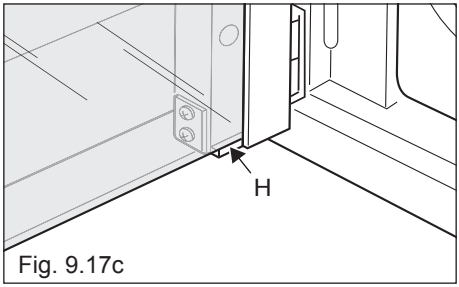

Fig. 9.17c

Advice for the installer

IMPORTANT

- The appliance is designed and approved for domestic use only and should not be installed in a commercial, semi commercial or communal environment.
  Your product will not be guaranteed if installed in any of the above environments and could affect any third party or public liability insurances you may have.
  The appliance may be installed in a kitchen, kitchen/diner or a bed sitting room, but not in a room or space containing a bath or a shower without first consulting current regulations.
  The appliance must not be installed in a bed-sitting room of less than 20 m^3.
- Cooker installation must only be carried out by a **SUITABLY QUALIFIED AND REGISTERED TECHNICIAN** and in compliance with local safety standards.
  Failure to observe this rule will invalidate the warranty.
- The appliance must be installed in compliance with regulations in force in your country and in observation of the manufacturer's instructions.
- Always disconnect the appliance from the power supply before carrying out any maintenance operations or repairs.
- Take care NOT to lift the oven by the door handle/s.
- Some appliances are supplied with a protective film on steel and aluminium parts.
  This film must be removed before using the cooker.
- **Important: The use of suitable protective clothing/gloves is recommended when handling or installing this appliance.**

WARNING
When correctly installed, your product meets all safety requirements laid down for this type of product category.
However special care should be taken around the rear or the underneath of the appliance as these areas are not designed to be touched and may contain sharp or rough edges, that may cause injury.

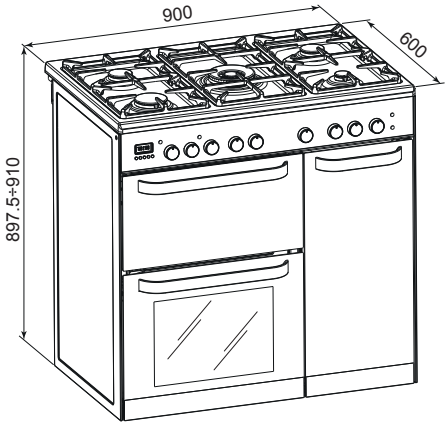

10 - INSTALLATION

This cooker has class “2/1” overheating protection so that it can be installed next to a cabinet.

If the cooker is installed adjacent to furniture which is higher than the gas hob cooktop, a gap of at least 200 mm must be left between the side of the cooker and the furniture.

The walls and kitchen furniture surrounding the appliance must be made of non-flammable material. The veneered synthetical material and the glue used must be resistant to a temperature of 90°C in order to avoid ungluing or deformations. It is recommended that a 10 mm gap to each side is made if the adjacent kitchen furniture is made of a plastic laminate wrap.

Curtains must not be fitted immediately behind appliance or within 500 mm of the sides.

It is essential that the cooker is positioned as stated below.

We do not recommend the cooker is located on a plinth. If this is unavoidable, it will be necessary to provide safety measures to prevent the appliance falling off.

The cooker must be installed by a suitably qualified technician and in compliance with local safety standards.

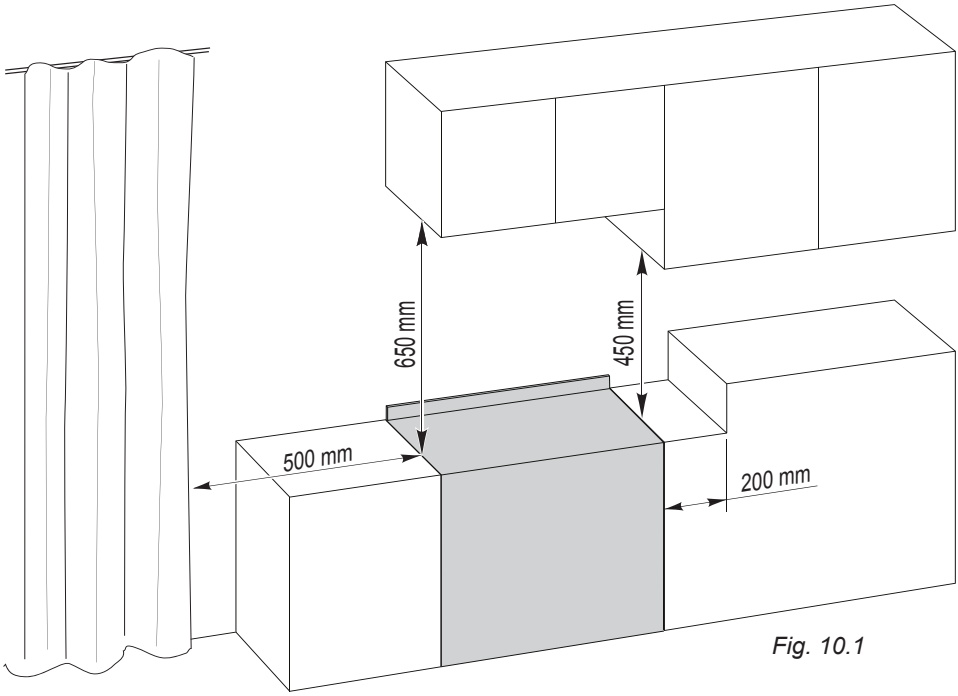

Fig. 10.1

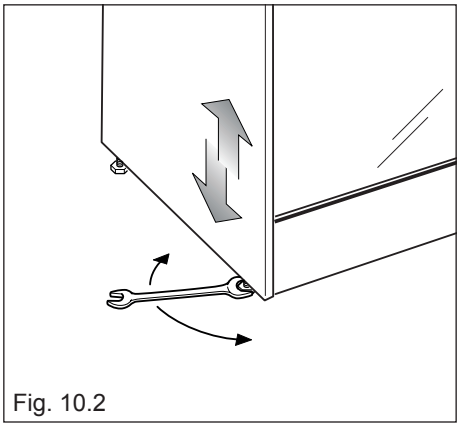

Fig. 10.2

LEVELLING THE COOKER

The cooker is equipped with 4 LEVELLING FEET and may be levelled by screwing or unscrewing the feet with a spanner (fig. 10.2).
The adjustable feet are already fitted to the cooker but the locking nuts which can be found in the oven packaging require to be fitted as detailed on figures 10.3 - 10.4.
It is important to observe the prescriptions of figures 10.3 - 10.4.

Fig. 10.3

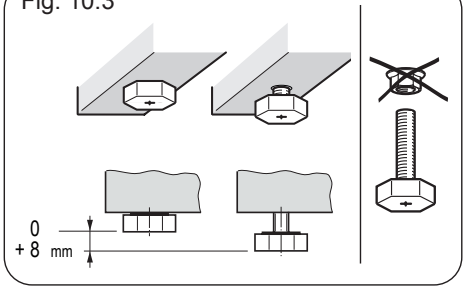

Fig. 10.4

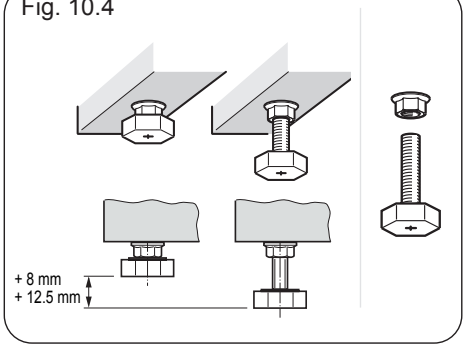

MOVING THE COOKER

WARNING: When raising cooker to upright position always ensure two people carry out this manoeuvre to prevent damage to the adjustable feet (fig. 10.5).

Fig. 10.5

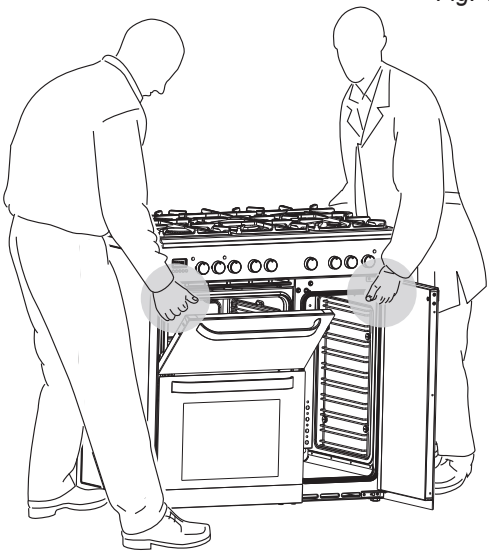

WARNING

Be carefull: do not lift the cooker by the door handle when raising to the upright position (fig. 10.6).

Fig. 10.6

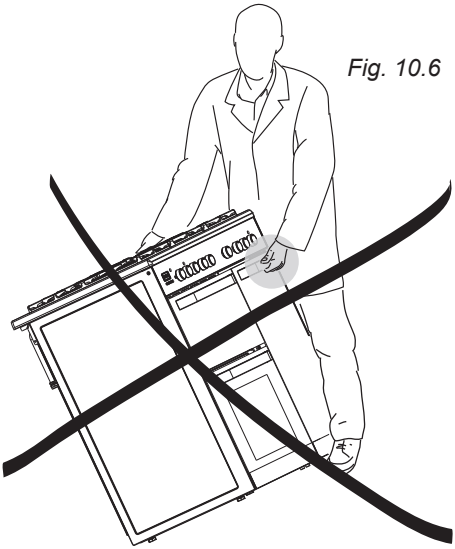

WARNING

When moving cooker to its final position DO NOT DRAG (fig. 10.7).
Lift feet clear of floor (fig. 10.5).

Fig. 10.7

PROVISION FOR VENTILATION

- The appliance should be installed into a room or space with an air supply in accordance with the current version of BS 5440-2: 2000.
- For rooms with a volume of less than 5m^3 - permanent ventilation of 100 cm^2 free area must be provided.
- For rooms with a volume of between 5 m^3 and 10 m^3 a permanent ventilation of 50 cm^2 free area will be required unless the room has a door which opens directly to the outside air in which case no permanent ventilation is required.
- For rooms with a volume greater than 10 m^3 - no permanent ventilation is required.

Note: Regardless of room size, all rooms containing the appliance must have direct access to the outside air via an openable window or equivalent.

- Where there are other fuel burning appliances in the same room, the current version of BS 5440-2: 2000 should be consulted to determine the correct amount of free area ventilation requirements.
- The above requirements allow also for use of a gas oven and grill but if there are other gas burning appliances in the same room, consult a qualified engineer.

11 - GAS INSTALLATION

IMPORTANT NOTE

This appliance is supplied for use on NATURAL GAS or LPG (check the gas regulation label attached on the appliance).

- Appliances supplied for use on NATURAL GAS are adjusted for this gas only and cannot be used on any other gas (LPG) without modification. The appliances are manufactured for conversion to LPG.
- Appliances supplied for use on LPG are adjusted for this gas only and cannot be used on any other gas (NATURAL GAS) without modification. The appliances are manufactured for conversion to NATURAL GAS.

If the NATURAL GAS/LPG conversion kit is not supplied with the appliance this kit can be purchased by contacting the After-Sales Service.

INSTALLATION & SERVICE REGULATIONS (UNITED KINGDOM)

It is a legal requirement that all gas appliances are Installed & Serviced by a competent person in accordance with the current editions of the following Standards & Regulations or those regulations appropriate to the geographical region in which they are to be installed:

- Gas Safety (Installation & Use) Regulations
- Building Regulations
- British/European Standards
- Regulations for Electrical Installation

Installation and service of any gas product must be made by a suitably qualified and registered person competent on the type of product being installed or serviced and holding a valid certificate of competence for the work being carried out. Currently the proof of competence is the Accredited Certification Scheme (ACS) or N/SVQ that has been aligned to the ACS.

It is also a requirement that all businesses or self employed installers are members of a class of person approved by the Health and Safety Executive.

Failure to install the appliance correctly could invalidate any manufacturers warranty and lead to prosecution under the above quoted regulations.

GAS CONNECTION

GB Cat: II 2H 3+

It is a requirement that a restraining chain (not supplied with the appliance) is also used to prevent stress being applied to the gas hose or pipework. The chain should be attached securely to the product and on the wall (fig. 11.1).

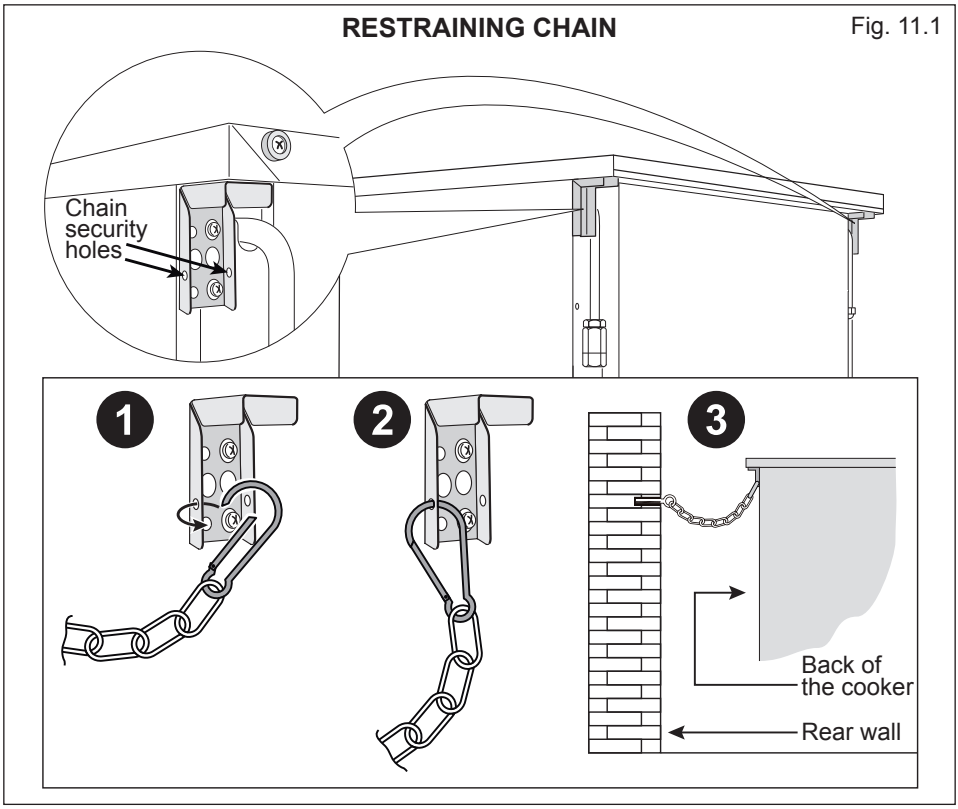

Installation to Natural Gas

Installation to Natural Gas must conform to the Code of Practice, etc.
The supply pressure for Natural Gas is 20 mbar.
The installation must conform to the relevant British/European Standards.

Installation to LP Gas

When operating on Butane gas a supply pressure of 28-30 mbar is required.
When using Propane gas a supply pressure of 37 mbar is required.
The installation must conform to the relevant British/European Standards.

Warning: Only a suitably qualified and registered installer, also with technical knowledge of electricity should install the appliance.
He should observe the Regulations and Codes of Practice governing such installation of gas appliances.
Note: It is recommended that the gas connection to the appliance is installed with a flexible hose connecting tube made to BS669 or EN 14800.

Notes:

- **Flexible hoses can be used where the sited ambient temperature of the hose does not exceed 70°C. These hoses must be manufactured in accordance with BS669 part 1 or EN 14800 and be of the correct construction for the type of gas being used.**
- **Gas hoses designed for natural gas MUST NOT be used for supplying LPG gas (LPG gas hoses can be identified by a either a red band or stripe on the rubber outer coating of the hose).**
  The hose should not be crushed or trapped or be in contact with sharp or abrasive edges.

IMPORTANT! It is the responsibility of the gas installer to ensure that the product is fully tested and commisioned in accordance with current regulations to ensure there are no gas escapes.

Gas connection (figs. 11.2, 11.3, 11.4)

- The gas supply must use the nearest gas inlet pipe which is located at the left or the right hand side at the rear of the appliance.
- **IMPORTANT NOTE:** Before connecting the appliance to the gas mains fit the female connector (supplied with the appliance in a separate kit) to the right or the left inlet pipe using the fibre washer supplied.
- **IMPORTANT: Check the correct positioning of the connector as per pictures and always operate using two suitable spanners.**
- The unused end inlet pipe must be closed with the plug and the fibre washer.
- The hose should not be crushed or trapped or be in contact with sharp or abrasive edges. It should also not be subjected to corrosion by acidic cleansing agents.
  The hose should also be connected in such away that it does not touch the floor and must hang in a natural loop between the appliance and the bayonet fitting.
- To avoid damage to the appliance gas rail inlet pipe the fittings should be tightened using two suitable spanners.

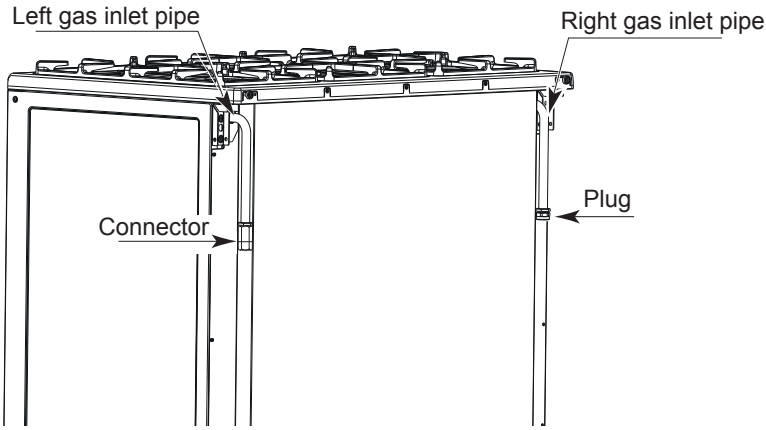

Fig. 11.2

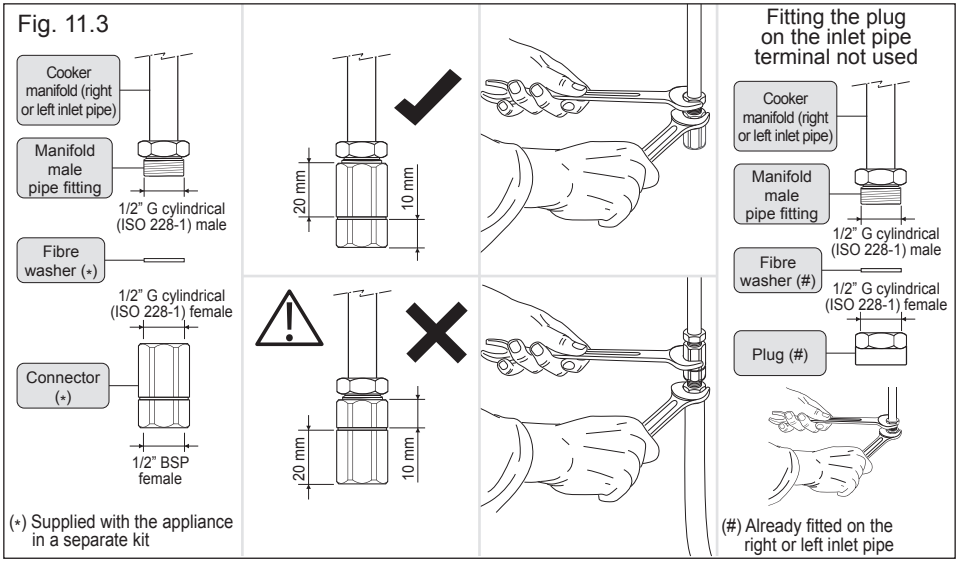
Fig. 11.3
Cooker manifold (right or left inlet pipe)
Manifold male pipe fitting
1/2" G cylindrical (ISO 228-1) male
Fibre washer (*)
1/2" G cylindrical (ISO 228-1) female
Connector (*)
1/2" BSP female
(*) Supplied with the appliance in a separate kit
20 mm
10 mm
20 mm
10 mm
Fitting the plug on the inlet pipe terminal not used
Cooker manifold (right or left inlet pipe)
Manifold male pipe fitting
1/2" G cylindrical (ISO 228-1) male
Fibre washer (#)
1/2" G cylindrical (ISO 228-1) female
Plug (#)
(#) Already fitted on the right or left inlet pipe

REPLACEMENT OF THE INJECTORS

If the injectors are not supplied they can be obtained from the After-Sales Service.

Select the injectors to be replaced according to the “Table for the choice of the injectors”.
The nozzle diameters, expressed in hundredths of a millimetre, are marked on the body of each injector.

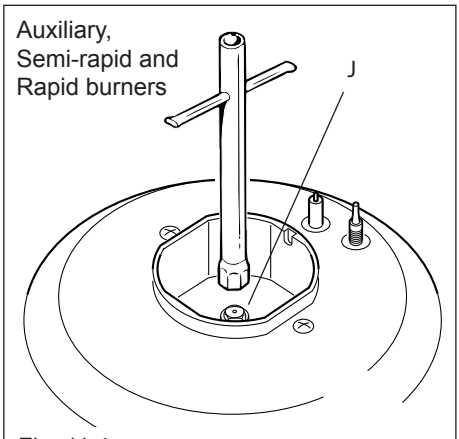

Fig. 11.4

REPLACEMENT OF THE INJECTORS OF THE COOKTOP BURNERS

To replace the injectors proceed as follows:

- Remove pan supports and burners from the cooktop.
- Using a wrench, substitute the nozzle injectors “**J**” (figs. 11.4, 11.5) with those most suitable for the kind of gas for which it is to be used.

The burners are conceived in such a way so as not to require the regulation of the primary air.

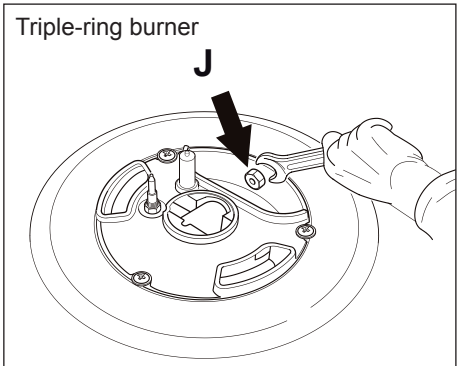

Fig. 11.5

ADJUSTING OF THE MINIMUM OF THE TOP BURNERS

In the minimum position the flame must have a length of about 4 mm and must remain lit even with a quick turn from the maximum position to that of minimum.

The flame adjustment is done in the following way:

- Turn on the burner.
- Turn the tap to the MINIMUM position.
- Take off the knob.
- With a thin screwdriver turn the screw “**F**” until adjustment is correct (fig. 11.6).

Normally for LPG, tighten up the regulation screw.

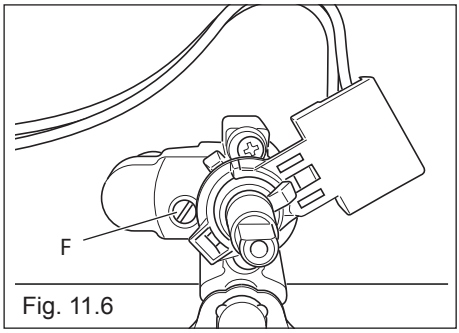

Fig. 11.6

TABLE FOR THE CHOICE OF THE INJECTORS

GB Cat: II 2H3+

BURNERS	Nominal power [kW]	Reduced power [kW]	**LPG** G30 28-30 mbar G31 37 mbar	**Natural Gas** G20 20 mbar
			Ø injector [1/100 mm]	Ø injector [1/100 mm]
Auxiliary (A)	1,00	0,30	50	77
Semi-rapid (SR)	1,75	0,45	66	101
Rapid (R)	3,00	0,75	87	129
Triple-ring (TR)	4,00	1,50	98	141

AIR VENT NECESSARY FOR GAS COMBUSTION = (2 m^3/h x kW)	
BURNERS	Air necessary for combustion [m^3/h]
Auxiliary (A)	2,00
Semi-rapid (SR)	3,50
Rapid (R)	6,00
Triple-ring (TR)	8,00

LUBRICATION OF THE GAS TAPS

- In case of difficulty in the gas taps operation, call Service.

IMPORTANT

All intervention regarding installation maintenance of the appliance must be fulfilled with original factory parts.
The manufacturer declines any liability resulting from the non-compliance of this obligation.

12 - ELECTRICAL INSTALLATION

IMPORTANT: The appliance must be installed in accordance with the manufacturer's instructions. Incorrect installation, for which the manufacturer accepts no responsibility, may cause damage to persons, animals and property.

The connection of the appliance to earth is mandatory. The manufacturer declines all responsibility for any inconvenience resulting from the inobservance of this condition.

Before carrying out any work on the electrical parts of the appliance, the appliance must be disconnected and locked off from the mains.

The appliance must be connected to the electrical network verifying that the voltage corresponds to the value indicated on the specifications plate and that the cables section of the electrical wiring can bear the load which is indicated on the rating plate.
We recommend that the appliance is connected by a suitably qualified person who will comply with the current IEE and local regulations.

It is recomended that the appliance is connected via a dedicated cooker circuit using a double pole cooker switch with a rating equal or greater than the total loading of the cooker, with a minimum opening between the contacts of 3 mm.

Alternative connection methods may be available as long as they conform to current IEE wiring regulations.

The power supply cable must not touch the hot parts and must be positioned so that it does not exceed 75°C at any point.

Once the cooker has been installed, the switch must always be easily accessible within 2 metres.

ELECTRICAL FEEDER CABLE CONNECTION

WARNING: If the power supply cable is damaged, it must be replaced only by an authorised service agent in order to avoid a hazard.

To connect the supply cable:

- Unhook the terminal board cover by inserting a screwdriver into the two hooks “**A**” (fig. 12.1).
- Unscrew the screw “**D**” and open completely the cable clamp “**E**” (fig. 12.2).
- Position the U bolts “**F**” onto terminal board “**G**” (fig. 12.2) according to the diagrams in fig. 12.3.
- Connect the phase, neutral and earth wires to terminal board “**G**” according to the diagrams in fig. 12.3.
- Strain the feeder cable and block it with cable clamp “**E**” (by screwing screw “**D**”).
- Close the terminal block cover (check the two hooks “**A**” are correctly hooked).

NOTE: The earth conductor must be left about 3 cm longer than the others.

IMPORTANT: To connect the power supply cable DO NOT unscrew the screws fixing the cover plate behind the terminal block.

POWER SUPPLY

230 V 50 Hz 7340 W

FEEDER CABLE SPECIFICATIONS
Type “H05RR-F” or “H05VV-F”

3 x 4 mm^2

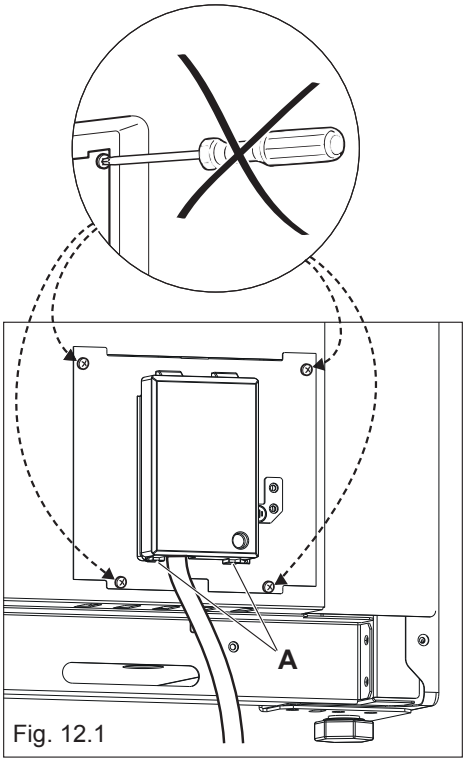

Fig. 12.1

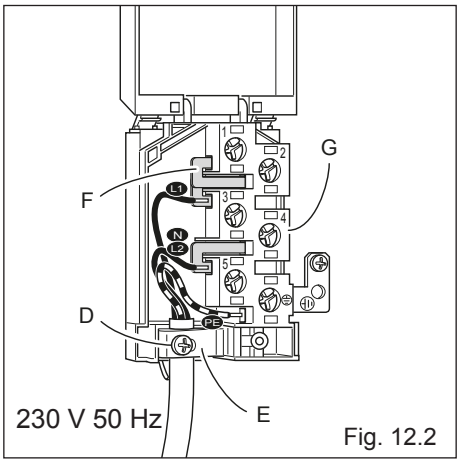

Fig. 12.2

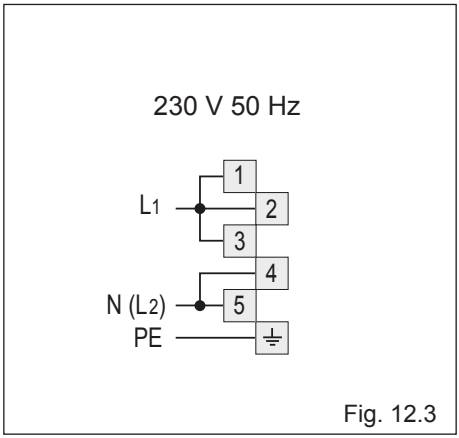

Fig. 12.3

13 - GUARANTEE

Your new **"KENWOOD"** product comes with 12-month guarantee covering all parts and labour.

If your appliance proves to be defective as a result of faulty materials or workmanship during the guarantee period, these parts will be repaired or replaced free of charge.

AFTER SALES SERVICE

IMPORTANT – MAIN OVEN NOT WORKING: if the main oven is not working please make sure electronic programmer is set to MANUAL operations (see pag. 25).

Should you require service, spares or product information and advice:

- Please Telephone 0843 362 1934.
- Details of your purchase receipt will be required if you require service within the first 12-month of purchase.

1. The rights and benefits under this guarantee are additional to your statutory rights, which are not affected by this guarantee.
2. The manufacturer undertakes within the specified period, to repair or replace free of charge any parts of the appliance found to be defective provided that:
   - We are promptly informed of the defect.
   - The appliance is installed and used in accordance with the written instructions enclosed with the appliance.
   - The appliance is used only on an electrical supply as indicated on the rating label fixed to the appliance.
   - The appliance has not been altered in any way or subject to misuse or repaired by a person other than an authorised service agent.
3. No rights are given under this guarantee to a person acquiring the appliance second hand or for commercial, semi-commercial or communal use.
4. This guarantee applies throughout the UK and Channel Islands.
5. Any repaired or replacement appliances will be guaranteed on these terms for the unexpired portion of the guarantee.

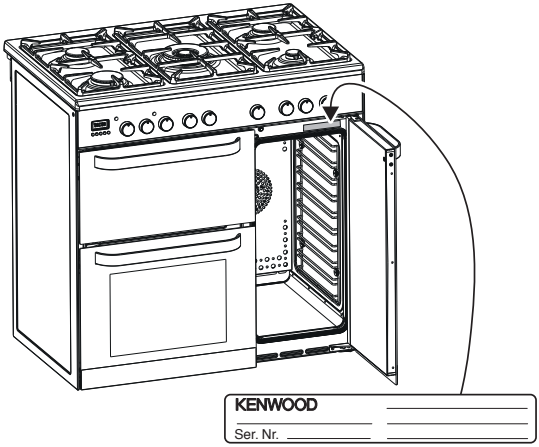

Fig. 13.1

The manufacturer cannot be held responsible for possible inaccuracies due to printing or transcription errors in the present booklet.
The manufacturer reserves the right to make all modifications to its products deemed necessary for manufacture or commercial reasons at any moment and without prior notice, without jeopardising the essential functional and safety characteristics of the appliances.

KENWOOD

Code: 1105260 - ß0